NPS ARCHIVE
1965
BAINBRIDGE, J.

DEVELOPMENT OF A COMPUTER ASSISTED INSTRUCTION PROGRAM FOR USE IN TEACHING BASIC MATHEMATICS TO GRADUATE STUDENTS

JOHN K. BAINBRIDGE
ROY T. JANIEC
WILLIAM H. LESLIE
JOHN C. SPENCE

LIBR
NAVAL POSTGRADUATE SCHOOL
MONTEREY, CALIF. 93940

DUDLEY KNOX LIBRARY
NAVAL POSTGRADUATE SCHOOL
MONTEREY, CA 93943-5101

62

DEVELOPMENT OF A COMPUTER ASSISTED INSTRUCTION PROGRAM
FOR USE IN
TEACHING BASIC MATHEMATICS TO GRADUATE STUDENTS

* * * * * *

John K. Bainbridge
Roy T. Janiec
William H. Leslie
John C. Spence

DEVELOPMENT OF A COMPUTER ASSISTED INSTRUCTION PROGRAM
FOR USE IN
TEACHING BASIC MATHEMATICS TO GRADUATE STUDENTS

by

LT. John K. Bainbridge, USN
CDR Roy T. Janiec, USN
LT. William H. Leslie, USN
LT. John C. Spence, USCG

Submitted in partial fulfillment of
the requirements for the degree of

MASTER OF SCIENCE

IN

MANAGEMENT

United States Naval Postgraduate School
Monterey, California
1965

c.1

NPS ARCHIVE
1965
BAINBRIDGE, J.

Library
U. S. Naval Postgraduate School
Monterey, California

DEVELOPMENT OF A COMPUTER ASSISTED INSTRUCTION PROGRAM
FOR USE IN
TEACHING BASIC MATHEMATICS TO GRADUATE STUDENTS

DUDLEY KNOX LIBRARY
NAVAL POSTGRADUATE SCHOOL
MONTEREY, CA 93943-5101

by
John K. Bainbridge
Roy T. Janiec
William H. Leslie
John C. Spence

This work is accepted as fulfilling
the research paper requirements for the
degree of

MASTER OF SCIENCE
IN
MANAGEMENT
from the
United States Naval Postgraduate School

ABSTRACT

The mathematical knowledge needed for the successful completion of the Navy Management program at the Postgraduate School is greater than that initially possessed by many of the officers assigned. Due primarily to a lack of time, the lecture-type review course currently offered to correct this situation has been only partially successful. More individualized instruction would be beneficial to all students involved; this could be realized in the given time period by the use of programmed instruction techniques. This study was concerned with programmed instruction in general and computer assisted instruction in particular. It was directed toward an attempt to determine the feasibility of utilizing computer assisted instruction methods at this school.

Specifically, the study developed a programmed instruction course in arithmetic and geometric progressions to be used with the IBM Computer Assisted Instruction System currently installed at the school. The course is designed to be used, after extensive testing and revising, in a feasibility study to determine if this method of instruction is superior to the lecture method of teaching basic mathematics to graduate students in the Navy Management Program.

This paper is an extensive report of the research conducted, the techniques adopted and the procedures followed in developing the programmed instruction course in progressions. It is intended to be beneficial both to an academic administrator and program authors interested in computer assisted instruction.

TABLE OF CONTENTS

Chapter — Page

I Statement of the Problem 1

II Summary of Selected Related Studies 6

III The Study - A General Discussion 13

IV The Study - A Detailed Discussion 27

V Summary of Study Results 42

VI Conclusions and Recommendations 45

Footnotes 49-50

Bibliography 51-55

Appendix A - Computer Assisted Instruction Course in Arithmetic and Geometric Progressions (Computer Print Out). A-1

Appendix B - Listing of Subject Areas and Associated Labels. B-1

Appendix C - Sample Print-out of Student Response Record. C-1

Appendix D - Textbook for Programmed Instruction Course in Arithmetic and Geometric Progressions. D-1

Appendix E - Student Typing Instructions for use with the IBM 1052 Printer-Keyboard. E-1

Appendix F - Flow Charts of Programmed Instruction Course in Arithmetic and Geometric Progressions. F-1

Appendix G - IBM 1401, 1440 or 1446 Operating System, Computer Assisted Instruction Manual. G-1

Appendix H - IBM 1440-1448 Operating System, Computer Assisted Instruction, Student Manual H-1

Appendix I - IBM 1440-1448 Operating System, Computer Assisted Instruction, Author and Proctor Manual. I-1

LIST OF TABLES

Table Page

1 Techniques Utilized in Course Design. 43-44

ACKNOWLEDGEMENTS

The authors are indebted to Professor James B. Cowie for his inspiration and constructively critical review of this manuscript; to our wives for being so tolerant during this period of frustration; to Miss Molly Muhs and Mr. Daniel Green, Field Representatives of the IBM Corporation, for their cooperative assistance in the use of the equipment and in unsnarling some of the machine problems; and to the Computer Facility Staff of the U. S. Naval Postgraduate School for their cooperation in providing the equipment and material for this project.

CHAPTER I

STATEMENT OF THE PROBLEM

Introduction

The purpose of this study was to develop a program of instruction in arithmetic and geometric progressions to be used with the IBM Computer Assisted Instruction System currently installed at the U. S. Naval Postgraduate School. This program is designed to be utilized in determining the effectiveness of computer assisted instruction in the teaching of basic mathematics to graduate students in the management curriculum.

Problem

The present day study of management principles at the graduate level requires a greater understanding of mathematics than is possessed by many of the officer students assigned to the twelve month Navy Management program. Consequently, the level of performance of the students with weaker backgrounds in mathematics must be raised to the required standards prior to the commencement of many of the graduate courses of instruction. A very limited amount of time and a small number of professors are available for the accomplishment of this task.

The incoming class to the Navy Management curriculum for the 1964-1965 academic year consisted of 106 students. As examples of the extreme variations of mathematical backgrounds: a few students had engineering degrees, had studied mathematics through differential equations, and had graduated from college as recently as 1961; one officer had studied computer programming at the University of Washington during the previous year; another

officer had just completed a four year assignment as an instructor in chemistry at the U. S. Coast Guard Academy. At the other extreme, some of the students had not completed college at all, and many of those who had, had graduated fifteen to twenty years ago and had taken very little or no college level mathematics courses. Two professors were assigned the task during the first term (a ten week period) of raising the level of mathematical ability of the entire group of 106 students to that required for the later courses.

This type of situation causes the following problems:

1. Practically no time is available for individual instruction for students having difficulty.
2. The progress of the class as a whole is hindered by the slower students at the expense of the more experienced ones; at the same time the more experiemced students tend to draw the entire class along at a more rapid rate than the slower students can handle. The result is detrimental to practically all of the students.

Consequently, a better method of presenting the basic mathematics review course should be implemented.

An alternative solution to the above problem would be to require a knowledge of mathematics through advanced algebra as a precondition to assignment to the management program. However, for the purpose of this study, it has been assumed that in the foreseeable future this alternative will not be selected.

Assumptions

The following assumptions were made by the authors of this study:

1. The mathematical requirements for the Navy Management program at the U. S. Naval Postgraduate School will continue to dictate that students be familiar with advanced algebra (including arithmetic and geometric progressions).

2. Many of the officer students ordered to the Navy Management program in the future will not initially possess the mathematical abilities stated in assumption 1.
3. Because of the initial wide range of mathematical abilities and experience of the incoming students, the present method of teaching the basic mathematics course is unsatisfactory.
4. Because of the conditions assumed above, a course must be offered by the school to insure that all management students obtain the required basic mathematical abilities prior to commencing certain graduate level courses.
5. Programmed instruction methods are an effective means of teaching in certain situations.
6. Computer assisted instruction is a natural evolution of programmed instruction.
7. Computer assisted instruction _may_ be more effective than the present method in the teaching of basic mathematics to management students.

Definitions

Programmed Instruction--a learner-centered method of instruction which presents subject matter by means of a teaching aid, in small steps or increments, requires frequent responses from the students, and immediately informs him of the correctness of his response.

Teaching Machine--a device specifically built to present programmed instruction material to students.

Computer Assisted Instruction (CAI)--a method of presenting programmed instruction material by means of an electronic computer.

Statement of Social Purpose

This study represents one step in the continuing development of more effective teaching methods. With a computer assisted instructional system, each student, independent of all other students in the course, can be given the sequence of subject matter best suited to his individual needs. Consequently, the student with more experience or higher aptitude can be taken through the entire course with a minimum of delay. Conversely, the student who is slower or less expreienced will automatically receive as much supplementary instruction as is necessary to raise him to the required level of performance.

The programmed instruction material developed in this study can be employed to test the feasibility of using computer assisted instruction in teaching basic mathematics to management students.

Research Significance

Computer assisted instruction (CAI) is still in the development stages, with little or no operational use in schools or training centers. Up to the present time only a few controlled experiments have been conducted with computer assisted instruction systems. These studies have been of relatively brief duration and have, in most cases, provided little opportunity to isolate the effects of specific program or machine characteristics on learning.

It is believed that the programmed instruction material developed by this study is the first computer assisted instruction course written in the area of the arithmetic and geometric progressions. It is further believed that this is the first CAI course prepared for practical application in raising to a specified level the mathematical ability of a large group of middle-aged students with widely varying experience and abilities in the quantitative area.

Limitations

1. Knowledge of basic algebra is a prerequisite for the CAI course in arithmetic and geometric progressions developed by this study.
2. Although the course material can be understood by anyone with a knowledge of basic algebra, some nautical terminology is interspersed throughout the program in an effort to maintain student interest.
3. At the time of this writing, very few students other than the authors have completed this program. Further student testing and subsequent revision is required for program validation. (Supplementary work in this area is planned by the authors; comments on these efforts will be available through the Business Administration and Economics Department of the United States Naval Postgraduate School).

CHAPTER II

SUMMARY OF SELECTED RELATED STUDIES

Statement of Sources Searched

The source material for this chapter was drawn from published books and periodicals and unpublished research/professional papers obtained from the libraries at the following locations:

1. United States Naval Postgraduate School
2. Human Research Unit, Presidio of Monterey
3. Defense Documentation Center, Alexandria, Virginia
4. System Development Corporation, Santa Monica, California
5. International Business Machines Corporation, San Jose, California
6. Monterey Public Library

Material in the area of programmed instruction was selected from the above locations on the basis of copyright dates. No material copyrighted prior to 1954 was studied; the large majority of the publications utilized were copyrighted subsequent to 1959.

The reasons for the choice of this selection criteria were as follows. The largest percentage of research in the field of programmed instruction has been conducted since 1954; most of the work in computer assisted instruction, the area in which the study group was primarily interested, has been undertaken since 1959. Several summaries of pertinent studies made prior to 1954 have been written in recent years; these summaries were also studied in order to gain a knowledge of earlier work in the field.

Background and Current Status of Programmed Instruction

Self-instruction devices or "teaching machines" have been available for many years. Considerable time and effort have been expended in determining the "best" device to be used in presenting programmed instruction material to students. However, recently a comparable amount of effort has been applied to the development of the programmed instruction itself--that is, the actual content and format of the material to be learned.[1]

Therein lies the explanation of the current status of the field of programmed instruction. Given the present state of technology, it is no large problem to develop a "teaching machine"; the biggest single problem today in the field of programmed instruction is the "poor quality and limited quantity of programs available."[2] In relatively few subject areas could a teacher find enough programmed materials to provide a major part of the instruction for a whole course. In addition, the great majority of commercially produced programs show a complete lack of imagination; they portray a "rigid, artificially restricted view of programmed instruction" which depends primarily on rote memorization for teaching.[3]

Some work in the area of programmed instruction was done as early as 1866. However, the method of programmed instruction as it is now employed may be considered to derive from efforts begun in the 1920's. In 1926, Sydney L. Pressey, an Ohio State University psychologist, made public his pioneer studies on the first recognized teaching machine. Pressey's model originally was conceived as a testing machine that presented a series of questions to a student and then informed him immediately of the correctness of his answer. In most respects Pressey's machine had the same capabilities as the machines

now in use. Yet, this early device did not strike a responsive cord in the field of education.[4]

Probably due to the depression, a surplus of teachers, and the war, it was not until 1954 that the interest in the possibilities and potentialities of automated instruction was rekindled. This revival was started by B. F. Skinner of Harvard University. Skinner, along with Norman Crowder, has devised auto-instructional methods which serve as the bases for the present day concept of programmed learning.[5-6]

In reviving and redirecting thinking about automated instruction, Skinner, like Pressey before him, focuses attention on the "teaching machine" (the hardware); but unlike Pressey, he places greater emphasis on the "program" (the software).[7] At the heart of any program lies the practice of what Skinner calls "reinforcement", an acknowledgment or reward of some sort to show that an organism has performed to satisfaction.[8] (Programmed learning reinforces the learner primarily by acquainting him with the correctness of his learning effort).

The Skinner theory supplies the ingredient missing from Pressey's experiments; it provides the concept of programming instructional materials that Pressey's machines needed.[9] Whereas Pressey looked upon the machine merely as a testing device, for Skinner the combination of machine and program is an instrument that teaches independently of other means of instruction. Consequently, Skinner places great emphasis upon the arrangement of the subject matter within the program. His programmed instruction courses are arranged in such a way that all students taking the course are led in a long series of very short steps through the entire program, receiving positive reinforcement each step of the way. Skinner's programs employ primarily completion type questions and are designed so that, ideally, no learner ever makes a mistake.[10]

Doctor Crowder, an Air Force psychologist, like Skinner, has enlarged upon Pressey's "immediate knowledge" concept. However, in contrast to Skinner's programming method, Crowder believes that the questions should be more of a challenge to the learner. He advocates constructing a program so that the student is branched to different sections of the course depending on the correctness of his responses. The bright student who makes few errors follows the main track without detours, while the slower student who gives incorrect answers can obtain more detailed information from sidebranch sections. As soon as he has proven that he understands the subject matter, he is guided back to the main track and continues. The Crowder method uses multiple choice answers exclusively.[11]

Regardless of the particular philosophy of program arrangement one follows, today's overall concept of programmed instruction embodies the following elements:

a. Active response by the student.

b. Small steps in which careful control of stimuli produces gradual increments in mastery of the subject.

c. Immediate feedback for each response.

d. Self-pacing, or individualization of the rate at which the learner masters the material.

e. Low error rate for the individual learner, as a consequence of the effective operation of the first four principles.[12]

The above principles incorporate teaching methods directed at the individual learner. A program that incorporates these principles requires the learner's active participation at each step. If the learner's response to a question is correct, he receives immediate reinforcement. If he is wrong, he is notified, and his error is corrected before he builds new knowledge on a shaky foundation.[12] Because he actively participates in the course, the student is

continuously aware of his progress. In this way, errors and misunderstandings do not accumulate.

In a good program, the curriculum is designed in a rational and cumulative manner, with maximum utilization of the inherent organization of the subject. The student is neither held back by slower students nor penalized if he moves slowly through the program.[13]

A relatively new method of instruction, with many of the advantages of a personal tutor, is called computer assisted instruction.[14] This method allows the instructor to use the computer as a means of disseminating instruction to a number of students individually.

Computer assisted instruction, still in the exploratory stage, has had little or no operational use. An ever-growing number of controlled experiments are being performed with this method. Up to the present time, the results, while encouraging, "have not yet conclusively demonstrated clear-cut superiority for this method of instruction over simpler, more orthodox teaching methods."[15]

There is, however, considerable evidence that computer assisted instruction is technologically feasible, and that it can produce a high level of performance in a variety of subject areas.[16]

The six or seven projects in this country presently making some substantial effort in the development and use of computer assisted instructional systems are oriented in two distinctly different ways: some projects take an equipment orientation, while others take a problem orientation.[17]

Equipment oriented projects usually begin with an equipment design, rather than a specific problem to be solved by the equipment. While the investigators in this area may do some behavioral research themselves, their primary objective

is the design of a tool with which others in education and training fields can do research or solve applied instructional problems.[18]

Problem oriented projects attempt to find better solutions to specific educational or training problems; they develop computer-based equipment only as it is needed to help solve these problems.

One of the more advanced problem oriented projects being conducted is one at the System Development Corporation called "CLASS", which stands for "Computer-Based Laboratory for Automated School Systems." As an example of the present state of the art, the following description of CLASS is quoted from a recent System Development Corporation professional paper:

> 'CLASS provides instruction for up to 20 students, under the control of a large digital computer, the Philco 2000. It has control and display facilities for a wide variety of instructional modes, including individualized or group programmed instruction, televised or filmed presentations, "live" lectures, and conventional textbooks. These modes may be used independently or in combination.
>
> In the individualized instructional mode, CLASS uses the same operational logic as the earlier single-station facility. At any particular time, different students may be on different parts of a program, or may even be studying different subject areas. The display and response equipment has been simplified in CLASS. The Philco computer does not directly control the item presentation, but instead displays sequence instructions to the student who then turns to the designated item in a film viewer or in a programmed booklet. A five-button response box is used in CLASS in place of the earlier typewriter keyboard. In addition, to the visual displays, every student in CLASS has his own tape recorder for individualized sound presentations.
>
> In the group mode, CLASS presents a common display to all students through a closed-circuit television system. The students respond individually and receive individualized feedback, but the pace and sequence of the instruction are determined by a teacher on the basis of the entire group's performance.
>
> Teacher consoles in CLASS permit teachers to monitor the progress of an individual student or of the entire class. A computer-generated alarm light at the console warns the teacher whenever a student is making too many errors or taking too long to respond. The teacher can then call up detailed, up-to-date displays showing the student's performance at this moment and in earlier work. He can also see the student's scores on aptitude and personality tests. These displays

> appear on a television tube under computer control.
>
> In addition to the study areas, CLASS provides space for a counselor and for administrators. The counselor can insert information into the computer about a student's performance on aptitude and personality tests, and he can request computer-generated displays giving detailed information about a student's classroom performance. An administrator can call up summary displays showing classroom attendance, personnel records and fiscal data.[19]

The project conducted by this study group was of the problem oriented variety. The equipment used was the experimental IBM Computer Assisted Instruction System which utilizes the IBM Coursewriter programming language. The system will be more fully described in Chapters III and IV.

CHAPTER III

THE STUDY - A GENERAL DISCUSSION

The remainder of this paper is intended to thoroughly outline the entire group effort to date so that, should this project be continued by other individuals, some of the problems and "learning pains" of this group can be avoided.

This chapter is written for educators who are interested in the field of programmed instruction in general and computer assisted instruction in particular. It presents an overall view of the thoughts and efforts of the study group and is designed for both the academic administrator and the program author. The topics discussed in this chapter cover a basic description of the IBM Computer Assisted Instruction System utilized in this project, the techniques employed in designing the program, and the general procedures followed in applying the adopted techniques. More detailed information on these topics is contained in chapter IV, for the use of prospective program authors.

Thoughts on the Objectives

The original objective of this study was to determine whether the IBM Computer Assisted Instruction System provided a more effective method of teaching basic mathematics to management students than the present lecture system. However, it soon became apparent that this objective could not be accomplished within the alloted time period.

In order to attain this original goal, it was believed that it would have been necessary to conduct controlled experiments in order to evaluate the alternative teaching methods. Prior to the conduct of these experiments, a representative portion of the course would have to be programmed, tested by students, and subsequently revised in the light of their reactions. Even

[illegible]

[illegible]

[illegible]

[illegible]

[illegible]

then, the question could be raised as to whether the subject area chosen was "truly representative" of the entire mathematics course. (For example, one portion of the course, as presented during the fall term of 1964, covered graphic techniques; the visual presentations required to teach this topic pose difficulties not encountered in programming, for instance, algebraic manipulations). The time required to complete a project of this magnitude was not available.

Therefore, the original objective was modified; the group elected to construct a program of only one phase of the mathematics course and to test and revise that program as much as possible within the time available. Arithmetic and geometric progressions were selected as the subject matter to be programmed.

Thus, the objective of this study was reached....to develop a program of instruction in arithmetic and geometric progressions to be utilized in determining the effectiveness of the IBM Computer Assisted Instruction System in the teaching of basic mathematics to Naval Management students at the U. S. Naval Postgraduate School.

Techniques of Program Design

During the conduct of this study, the group was considerably influenced by the work of Dr. Crowder, and that of Dr. Coulson and his associates at the System Development Corporation.

Dr. Crowder's programs start out with a paragraph which the student is asked to read. Then he gives the student some questions with two or more multiple choice type answers. If the student is wrong on any question, he goes off on a detour to be given some more information depending on the type of error he has made. If the answer is badly incorrect, the student can be

[illegible]

[illegible]

[illegible]

[illegible]

[illegible]

[illegible]

branched to a whole supplementary series of review questions before he comes back to the starting point. These basic concepts were incorporated into the construction of the program so as to make many of the questions difficult enough to challenge the superior student, while "allowing other students to make errors which are then corrected by digression to remedial sequences."[20] The primary reason for the selection of this method was to take advantage of the flexible branching capability of the IBM Computer Assisted Instruction System.

Dr. Crowder recommends the use of multiple-choice answers in programmed instructions. However, this study group deviated from this technique and utilized, instead, constructed responses (a few, true/false questions were also used.). The selection of constructed responses was based on several factors: multiple choice answers do not lend themselves well to mathematical type problem solving (there are normally too few "seemingly logical", but incorrect alternative answers to list); "total recall", necessary in constructing responses, requires a more thorough subject knowledge than does simple "recognition", required in multiple-choice questions, and the probability of "guessing" the correct answer is less when constructed responses are used.

The branching technique of Dr. Crowder was combined with the following thoughts obtained from studying Dr. Coulson's work and applied to the task of constructing the program. Dr. Coulson stated that, because of poor programs, three out of four studies in the area of computer assisted instruction result in "no significant difference" between the CAI method and the classroom lecture method of teaching.[21] He complained of the great "rigidity in the format and organization of programs".[22] In addition, he stressed the importance of avoiding "gaps" (areas of instruction not sufficiently covered) in the program, eliminating "irrelevant" material (material not contributing to the final objective), not allowing the student to proceed to new topics

until he has demonstrated mastery of the present material,[23-24] and subjecting the program to continual testing and revision.[25-26] This study group attempted to keep all of these factors in mind during the construction of this program.

In order to avoid the "rigidity" of format and organization of which Dr. Coulson complained, the course presentation was divided between a textbook-like handout and the "teaching machine;" and an attempt was made to vary the format of question/comment presentation throughout the program. The use of humor and nautical terminology was employed in an attempt to maintain student interest.

Strictly intuitive methods were employed to avoid "gaps" and "irrelevant" material, and to prevent the student from proceeding prior to mastering his present section. The success of these intuitive efforts--indeed, the success of the entire study--is presently unknown because Dr. Coulson's final technique, continual testing and revision, has not yet been accomplished.

It is firmly believed that program revision based on comments resulting from student testing is probably the single most important ingredient in the development of a programmed instruction course. The group takes the position that whenever a willing student does not learn from a programmed instruction course, it is at least partly failing in its purpose, and the author must be alert to make improvements in the course that will help such a student. While constructing a programmed instruction course, an author must attempt to anticipate all of the questions of all of the students who will take his course. When a student does not learn, it is partially because questions have been raised in his mind which the author failed to anticipate, and consequently, did not cover in his material. It is highly unlikely that, in the initial draft of a program, an author will successful anticipate "all questions of

all students." Hence the importance of student testing and consequent revision--of letting the program be contributed to "partly by students--not wholly by teachers."[27]

Two methods have been utilized to date in gathering information for program revision. One method used was the analysis of the print-out of student responses which the system furnishes. The other method was the creation of a tutorial type situation between the author and student. During these tutorial sessions, evaluations were made based on the student's comments as he progressed through the program.

The IBM Computer Assisted Instruction System

The following description of the IBM Computer Assisted Instruction System used in this study is intended to sufficiently familiarize the reader with the equipment to enable him to understand the remainder of this chapter. Some system costs are also briefly discussed.

The CAI system presently installed at the Postgraduate School consists of an IBM 1401 Computer, random access memory devices, and a printer-keyboard (typewriter). The IBM programming language utilized with this system is called Coursewriter.

The IBM 1401 Computer controls the operation of the overall system by acting as a middleman between the student and the program stored in the memory. For example, the computer retrieves questions from the memory storage, presents them to the student via the printer-keyboard, compares the student's answers with all possible answers listed by the author, and then replies with appropriate comments such as "Correct" or "Try again". The 1401 has a limited "time-sharing" capability, that is, the ability to perform several different tasks at the same time. It can simultaneously handle up to

four terminal panels (or typewriter units) while still performing a few other unrelated operations.

The random access memory units used with this system store individual student performance records and other bookkeeping information in addition to the entire contents of the course material. For all practical purposes, these units can instantaneously retrieve any previously stored information requested by the system. The system used in this study contained two memory drive units. Each drive unit holds one easily removed and relatively inexpensive memory disk pack, and each disk pack can hold up to five separate courses. Thus the system, once installed, can readily be used to present many different courses.

The system component with which both the author and student will be primarily concerned is the printer-keyboard. This unit, essentially an electric typewriter with a few additional system control keys, is, to the student, the "teaching machine" of the system.

Using the printer-keyboard and the Coursewriter language, the author can type his course directly into the computer's memory. In addition, with this typewriter, he is able to continually and easily revise his course and have it printed out exactly as the student would see it.

The IBM Coursewriter language used with this system is relatively easy to master. It approaches the highly desirable feature of "plain language" programming; the bulk of the actual program is plain language. The Coursewriter simplicity permits the author to concentrate on his textual material without being unduly distracted by complicated programming requirements.

Coursewriter consists primarily of two parts: (1) a set of two-letter "operation codes" which the author uses to instruct the system how to handle his course material, and (2) a set of control words to aid the author in

writing his course (e.g., delete, insert after, type) and to assist the student while taking a course (e.g., help, go to). (The meanings of the control words will be explained later in the paper).

One of the more interesting features of the Coursewriter language is its ability to branch students to various remedial series of questions based on their performance in the course. In the IBM system, this branching may be accomplished by one of three methods:

(1) The student's own evaluation as to whether he feels ready to continue,

(2) The correctness of his response to a particular question, and

(3) The number of errors accumulated on a "counter" over a given series of questions.

Under the first method, the student is asked whether he wants to proceed or review. If he replies the former, he will automatically continue in the program. However, if he wants to review, he will be branched accordingly. That is, the material can be programmed so that he is automatically branched to a particular area (see Appendix A, page A-15, label b10b for example.); or, it can be designed so that the student can choose his own review area. (see Appendix A, page A-45, label d53 for example.).

In addition, at any time during the course, the student may branch himself to any chosen segment of the program by typing the control word "go to" followed by the label of the statement he wishes to review. (A list of subject areas and the associated labels should be provided to each student. (See Appendix B.)).

The student has no control over the second method of branching; he is branched automatically, based on the correctness of his response, to a particular question.

The third method available utilizes a counter. The counter is a machine feature which counts correct and/or incorrect student responses. When "instructed", the computer checks the status of a counter, and based on the status, makes a programmed decision as to which branch of the program the student will follow. The printer-keyboard then automatically prints the question which the counter status indicates the student should see next. The use of the counter provides the author great flexibility in branching a student through his course.

This system also has the capability of recording and printing out a record of each student's response to each course question. (See Appendix C for example). This feature aids both in student record-keeping and as previously mentioned, in overall program evaluation. (From the print-out, it is easy to determine if errors are concentrated in any particular section of the program, which would indicate a necessity for revision).

Another Coursewriter feature which assists the student in his learning process is the control word "help". If the student becomes completely confused by any question, he can type this word, and the correct answer will be revealed to him. The system automatically records the action so that an instructor can readily detect an excessive use of this aid.

This system also has the capability of transferring any programmed course from the random access memory devices to either magnetic tape or punched cards. These tapes or cards (or for that matter, the actual memory disk packs) can be passed between similar systems at different locations (for instance, different schools).

Information of Related Costs

An economic analysis of the IBM-CAI System installed at the Postgraduate School was not conducted; however, for general information, some approximate monthly rental costs of the equipment are listed below.

The initial system installation required the procurement of the following equipment:

System Component	Approx. Monthly Rental
2 - Random access memory units and adapters	$1375.00
1 - Printer-Keyboard (including associated equipment)	225.00
1 - Transmission Control Unit (controls flow of messages between printer-keyboard and computer)	270.00
	$1870.00
Less 20% educational discount	-374.00
Total approximate monthly rental for presently installed system components.	$1496.00

Additional random access memory disks may be obtained at a rental cost of fifteen dollars per month. The installation of additional student terminal panels would require the acquisition of one printer-keyboard and transmission control unit for each new panel; the total marginal monthly rental cost would be approximately $395.00 for each panel.

The IBM 1401 Computer had been purchased and installed at the computer facility prior to the installation of the CAI equipment; therefore, it is considered a sunk cost of the present system. However, since the computer is capable of handling only four printer-keyboards, the cost of an additional computer would have to be considered if the system were expanded beyond this number.

Initially, the cost of a computer assisted instruction system may be prohibitive. However, in organizations where computers are already being used for various data-processing and control functions, the cost might be reduced by time-sharing with existing equipment (as was done at the Postgraduate School). Development of small special purpose computers might reduce the cost substantially in the future.[28] It is also important, when considering CAI system costs, to include the cost of programming---a very time consuming process.

Procedures

The field of inquiry of this study immediately confronted the group with several dilemmas. Only one member possessed any previous teaching experience; none of the members had any experience in the field of programmed instruction; no one was familiar with the IBM Computer Assisted Instruction System; and although all of the members were reasonably proficient in algebra, it was believed that further study of arithmetic and geometric progressions was warranted prior to writing the program.

In an effort to overcome these barriers, the group divided itself into two sections; one-half concentrated on the field of programmed instruction in general and computer assisted instruction in particular; the other members undertook the task of gathering sufficient information on arithmetic and geometric progressions to develop the course material. Simultaneously, all four members attempted to become familiar with the IBM Computer Assisted Instruction System and the Coursewriter language. The attainment of further knowledge or experience in the area of pedagogy was considered infeasible; however, it was felt that a successful program could be developed on the basis of the study group's recent experience as students.

After approximately two months of research and prior to the commencement of writing the program, an interview was obtained with Dr. Coulson. The information gathered during this session proved to be extremely valuable during the remainder of the study.

The next step was the establishment of the desired student terminal behavior. It was determined that upon completion of the program, a student should possess a working knowledge of the formulas and vocabulary in the subject area; in addition, he should be able to cope with "word problems" and relate his knowledge of progressions to such concepts as present value, interest rates, and depreciation. This determination was based on the authors' knowledge of concepts required in subsequent graduate level courses.

Rather than program all of the subject matter into the computer, a short text was prepared which included some definitions, formulas, and examples (see Appendix D). There were several reasons why it was considered appropriate to incorporate a text into the course. It was initially believed that programming the entire AP/GP course would take up too many characters of disk storage (this assumption was later found to be incorrect). The authors also felt that some textual material was desirable to aid the student in making the transition from their usual "book learning" to "machine learning". Another importand consideration was that the printer-keyboard types messages at a slower rate than the average student reads; this could cause the student's interest to wander as soon as his initial fascination with the machine waned. Finally, the textbook material would provide a set of notes for the student to retain upon completion of the course.

In writing the text, particular emphasis was placed on the page by page, physical layout of the subject matter. Formulas were set apart from the general explanations and one or two examples of the use of each formula were

incorporated. Throughout the text, particular care was taken to insure that the subject matter was described in the most simplified manner possible.

A decision was made that the course should be completed in five "cycles", the subject matter to be covered in each cycle to conform to the "natural" breakdown of the course material. These five sections were:

Section A - Definitions,

Section B - Finding the nth term of an arithmetic progression,

Section C - Finding the sum of an arithmetic progression,

Section D - Finding the nth term of a geometric progression,

Section E - Finding the sum of a geometric progression. (This last section included the sum of an infinite geometric progression, repeating decimals, the interest rate formula, and a review, including arithmetic/geometric progression word problems).

The student, while taking the course, would read a particular section of the text and then utilize the typewriter to complete the programmed instruction covering the same topic. Upon completion of that cycle, he would return to the text and commence the subsequent cycle. This reading of the text, interspersed with sessions on the typewriter, was considered to provide a desirable break in the study routine. In addition, the authors believed that completion of a cycle in one section of the course prior to reading a subsequent section would result in greater student retention than if the entire text were read before utilizing the programmed instruction in the computer.

A set of typing instructions (Appendix E) was devised to familiarize the student with system typing peculiarities. A copy of these instructions should be furnished to each student.

Thus, after approximately three months of research in the areas of programmed instruction, arithmetic and geometric progressions, and the IBM

Computer Assisted Instruction System, the problem of writing the actual program was undertaken.

Prior to the actual program construction, it was decided to use the Crowder branching technique and to incorporate the other techniques of program design previously discussed. In addition, the desired student terminal behavior was kept constantly in mind. Beyond these factors, the authors utilized relatively independent methods of program construction.

Probably due to similar backgrounds of organizational training, the authors approached the programming problem in a nearly identical manner. Drawing on information gathered from textbooks and that material which had been incorporated into the handout, each author outlined the material he wished to present in his section. He then constructed a rough, but detailed outline or flow chart, (see Appendix F) which included all of the questions, expected student responses, hints, etc., to be contained in the program. These flow charts aided in demonstrating the logic of the branching that each student would follow. A considerable amount of revision was conducted prior to completion of the initial, intuitively constructed program.

When the flow charts and programs were completed, the authors began to type the course material into the computer's memory. This turned into a tedious and disconcerting task. The difficulties encountered stemmed from several factors: the authors were only "average" typists; the physical layout of the course material, as it would be presented to the student, was considered very important, and consequently much time was expended on its arrangement; the type of course material involved (mathematical symbols, equations, etc.) was inherently tedious to handle; absolute accuracy was mandatory; the time constraints did not permit adequate familiarization with the equipment prior to insertion of the actual program; and some haziness of explanations and lack

of examples in the IBM-CAI manuals caused some programming difficulties. Some of the above difficulties could have been precluded if the authors had become more familiar with system equipment and procedures prior to commencement of program insertion.

After the entire program had been loaded into the computer's memory, a print-out of the course was obtained on the printer-keyboard. This print-out was reviewed to detect typing, spelling, and programming errors and to improve the format of the student presentation.

Next, the authors reviewed each other's course in a further attempt to detect remaining programming and typographical errors and to constructively criticize the textual material. Several programming errors were discovered which had to be eliminated. Again, most of these errors were due to the lack of complete understanding of many of the Coursewriter programming "operation codes". (In order to preclude these and other errors being repeated by future authors, it is strongly recommended that, in addition to thoroughly studying the IBM-CAI Manuals, and prior to writing their programs, they completely familiarize themselves with the actual equipment and its operation by practicing with sample problems).

Upon completion of these initial revisions, the authors began to subject the program to testing by students. At the time of this writing, an insufficient number of students have tested the program to warrant comments on this phase of the project. As previously iterated, subsequently generated material will be available through the Business Administration and Economics Department of this school.

The following chapter is intended for prospective authors and contains a more detailed discussion of some of the programming difficulties mentioned in this chapter.

CHAPTER IV

The Study - A Detailed Discussion

This chapter is written specifically for those authors who are interested in writing programs for the IBM Computer Assisted Instruction System. Academic administrators and educators who are concerned only with the more general aspects of programmed instruction and computer based instructional systems need not concern themselves with the contents of this chapter.

Programming the course in arithmetic and geometric progressions proved to be a difficult, time consuming, and often frustrating task. However, many of the problems encountered were due to the lack of programming experience on the part of the authors. In an effort to preclude the repetition of some of these difficulties by other authors, this chapter will give a more detailed discussion of the capabilities and limitations of the IBM 1401-1026 Computer Assisted Instruction System, the Coursewriter programming language, and specific problem areas encountered in programming.

The IBM Corporation offers three reference publications which describe their Computer Assisted Instruction System: *The 1401 Operating System Manual,* which contains a general description of their CAI System; a *Student Manual* which includes the information necessary for the student to use the printer-keyboard; and an *Author and Proctor Manual*, which describes some of the capabilities ofand machine requirements for CAI, and includes some additional information for authors and proctors (operators of the computer portion of the system). These publications are included as appendices G, H, and I, respectively. All three manuals should be studied thoroughly by prospective authors prior to writing their programs.

In order to understand the remainder of this chapter, it is recommended that the first seventeen pages of the 1401 Operating System Manual (Appendix G....up to the sub-title "Proctor Control") be read prior to continuing.

The IBM 1401-1026 Computer Assisted Instruction System

An understanding of the functions of the various components of the 1401-1026 Computer Assisted Instruction System provides the author of a program with a broader base of understanding from which to develop his course. In an effort to assist future authors in understanding this equipment, this section covers the IBM-CAI System presently installed at the U. S. Naval Postgraduate School. This system consists of two IBM 1311 "random access" Disk Storage Drives, an IBM 1401 Computer, one IBM 1026 Transmission Control Unit, and one IBM 1052 Printer-Keyboard.

The IBM 1311 Disk Storage Drives. As stated in chapter III, the IBM 1311 Disk Storage Drives retain on "disk packs," the course material and individual student performance records. Each section of storage on a disk pack contains an address so that course material can be retrieved from any area thereof. Each disk pack is capable of handling as many as five different courses (two million characters of information). The disk packs may be removed from the Disk Storage Drives and thus a library of courses may be maintained.

This study group utilized two disk packs continually: the systems pack, (commonly called Drive Zero), which contained the master instructions for the CAI system and the student performance records; and the disk pack (Drive Two) on which the arithmetic/geometric progressions course was located. Initially, disk storage space was reserved for fifty students. When a

student completed the program, his name and records were removed from the system. (The procedure for removing students is contained in Appendix I, page 18). Space for considerably more students could have been reserved had it been needed. The course material programmed, originally required approximately 250,000 characters of disk storage space. However, when the program had been "reassembled" and the typing and programming errors removed, only 200,000 characters of storage space were consumed.

The IBM 1401 Computer. The 1401 is definitely not suited for a "large scale" computer assisted instruction system because of its limited "time-sharing" capability. The primary reason for this limited capability is the small capacity of this computer's memory---16,000 characters of information at any one time. (This memory is distinct from the two million character memory of the disk storage packs). These 16,000 spaces are currently allotted as follows: 12,500 are required for the CAI system, and the remaining 3,500 are taken up by the time-sharing "functions". (The school computer facility uses the 1401 primarily for card-to-tape and tape-to-print programs; the 3,500 characters are required so that these functions can be accomplished simultaneously with CAI).

The computer is often required for "other" school functions which can not be handled on a time-sharing basis. The computer facility presently schedules these "other" functions at times when the CAI system is not being utilized. Fortunately, this study was conducted during a slack period for the computer facility; if the CAI system were to be used on a regular basis, a schedule for the use of the 1401 would have to be devised.

Another (and probably more important) "time-sharing" limitation is the 1401 computer's inability to carry more than four student terminal panels simultaneously. Professors, attempting to use the system for a class of

students, would be faced with a rather difficult scheduling problem. In addition, if all four student terminal panels were operated simultaneously, the reaction time of the computer would be seriously reduced. A "queuing" problem would develop in which three students were required to wait while the computer assisted the fourth. All of these problems could be alleviated if a larger computer (such as the IBM 360) were used for CAI.

The IBM 1026 Transmission Control Unit. This unit furnishes the linkage between the student and the computer by controlling the flow of messages between them. Messages from the students (and authors) are temporarily stored in the Transmission Control Unit's (200 character) "buffer" memory. Upon completion of a message, the control unit transmits the entire "block of print" to the computer. The "buffer" memory in the Transmission Control Unit is the device that permits the computer to be used for time-sharing functions without disrupting the student or author who is working at the typewriter. One Transmission Control Unit is required for each Printer-Keyboard.

The IBM 1052 Printer-Keyboard. Perhaps the most important element of the system with which an author should become familiar prior to writing his program is the IBM 1052 Printer-Keyboard. It is essentially an electric typewriter with a few system control keys added; also, several of the usual typewriter keyboard characters have been replaced with certain mathematical symbols.

When using the printer-keyboard to type his course into the computer's memory, the author, at the completion of every "block of print" (a maximum of 150 characters), must type an End-of-Block (EOB) code. This code signals the computer to take the message that has just been typed and is being held in the Transmission Control Unit, and perform some function on it (such as store it on a Disk Storage Pack, compare it with a message already in

memory, etc.). The EOB code is transmitted by simultaneously pressing the ALTERNATE CODING key and the number five (5) key. If the author or student is typing in a message and he wishes to cancel it prior to pressing the EOB keys, he simultaneously presses the ALTERNATE CODING key and the number zero (0) key, and then presses the EOB keys. The computer will then type "please repeat" and the author can repeat his message. If the author wishes to cancel a message after the EOB keys have been pressed, he must utilize the "delete" function which is explained in Appendix G, page 16 . The student, however, cannot delete or change his input after he pushes the EOB keys.

The actual typing of the program into the computer memory proved to be a rather tedious and frustrating task for the authors of this program, for although they had studied the IBM Computer Assisted Instruction Manual (Appendix G) and were average typists, they had a considerable amount of difficulty with lengthy equations due to the system limitation of 150 characters per block. An author would type in an entire equation only to be"informed" by the computer that he had used more than the 150 characters allotted. Consequently, he would then have to repeat the entire equation using several blocks of print. (See Appendix A, page 69, labels e50-39 through e50-42. The student print-out will, however, appear in proper equation form; not as an over print as illustrated in this example). The system provides no means for counting the number of characters that have been utilized. (There is a scale on the printer-keyboard, but it does not count back spaces and line feeds; unfortunately, the computer does). The 1401 is presently programmed to accept only 150 characters in one block of print. This number of characters could be increased by revising

the program (but not beyond 200 characters since the transmission control unit is designed for a 200 character capacity).

The other unusual feature of the typewriter is the "PROCEED" light located just above the typewriter keys. The PROCEED light is necessary to permit time-sharing among student terminal panels. The author or student can type a message to the computer only when this light is illuminated. When the author or student is not typing, the PROCEED light's cycle consists of "ON for approximately thirteen seconds, OFF for ten seconds"; this means that as soon as the light comes on, the typist has approximately thirteen seconds to begin typing his message before the light goes off again. Once the author begins to type, he may type as long as he wishes, unless he at any time waits longer than thirteen seconds between the typing of any two characters; if he does, then the light will go off, and everything that he has typed subsequent to the last EOB code will be lost. The typist must consequently follow the cancel procedure and start over. For this reason, the PROCEED light proved to be fairly bothersome. Frequently an author would type in a statement and while he was checking to see if the statement had been correctly typed prior to pressing the EOB keys, the light would go out and he would have to repeat the entire block.

A block diagram of the various components of the IBM 1401-1026 Computer Assisted Instruction System may be found in Appendix G, page 9.

Coursewriter

The IBM Coursewriter programming language used with this system is relatively easy even for the non-computer oriented author to master. A complete description of the Coursewriter language may be found in Appendix G. This discussion will not attempt to repeat the descriptions contained in the

appendix but will concentrate on the specific areas in which the authors had difficulty interpreting the IBM 1401 CAI manual.

The descriptions of the operation codes are particularly difficult to interpret because the CAI manual provides no examples of their usage. Operation Codes not adequately described in Appendix G , are presented below in the order they appear in the manual and should be read in conjunction with the manual descriptions. It is hoped the following comments will be of assistance to future authors:

Operation Codes	Comments
rd	An "rd" operation code will cause the computer to print out on the typewriter (Printer-Keyboard) the course material which follows this code in the text section. The computer always waits for a response after it has printed the "rd" textual material, so it is recommended that the author include at the end of the message to the student (course material) "Press EOB"; otherwise the typewriter and the student will just sit and stare at each other. For an example of incorrect usage, see Appendix A, page 46 , label number e0, which states: "e0 1 rd Section E, Sn of a Geometric Progression". The computer will print out this heading and wait for the student to respond. Unfortunately the student will not know that he is supposed to do anything. To alleviate this, the instruction "Press EOB" can be inserted just under the statement.
wa -	The text following this code is a specific incorrect answer. The author has anticipated that the student would make this response and can follow this code with a "ty" operation code providing

specific assistance to the student. For example, in Appendix A, page 8 , question a18 uses the "wa" operation code for the incorrect answer "subscript". The author follows this instruction with a "ty" instruction (a18-8). "No, I didn't ask you what 2 was called. I said a_2. Try again." Thus, the author has provided specific assistance to the student. Note: the operation code "wa" causes the computer to wait for the student to respond again after the sequence has been completed, so if the author gives the correct answer to that particular question in the "ty" instruction, he must follow it with a branch instruction; otherwise the computer and student will again be staring at each other.

un - This operation code is used for any unexpected student responses. It can be utilized by the author to tell the student, for example, "No, try again." or, if he wishes, the author may give the student a hint and then tell him to try again. There are ten "un" operation codes available for each question, providing the author a great amount of flexibility in helping students who are repeatedly missing the same question. It is important to remember, however, that after the last "un" code used, a branch instruction should be included; otherwise this last code will be repeated to the student each time he subsequently misses the question.

nx - This operation code was never utilized.

ad - This is one of the more important codes available to an author as it may be utilized to maintain a running status of correct or incorrect student responses, a function necessary when utilizing

the system's branching capabilities. There are ten three-digit counters per student per course. The last two counters (9 and 10) are utilized to automatically count the number of "help" and "go to" requests the student makes. Six counters were utilized in various segments of the program to keep track of incorrect and correct responses for branching purposes. The format used was:

ad ± (constant) // ± (counter)

For example in Appendix A, page 46, question e1-5, the author utilizes counter number 6 (c6) to count correct responses:

5. ad - 1 // c6

This means: "Add minus 1 to counter 6 if the student answers question e1 correctly. (Negative numbers must be used in this case to make the branching sequences function properly. See the br section that follows.) In the same question, he also utilizes counter 5 for incorrect responses.

12. ad - 1 // c5

The author also may at any time reset his counters to zero by adding an equal and opposite amount to the counter. Thus:

ad - c5 // c5

means to the computer, add minus the contents of counter five to counter five. (Thus zeroing the counter).

br - This, of course, is the "branch" operation code. It has two forms, the unconditional and conditional branch; ("condition" referring to the condition or status of a counter). The unconditional branch is utilized to branch the student to a particular

question number without regard to counter condition. For example, in Appendix A, page 46, statement number e1-17 reads:

17. br e2

This means that when the student has finished reading the material in statements e1-13 to e1-15, and the computer has added minus one to counter five (statement e1-16), the computer will branch the student to question e2.

The conditional branch allows the author to branch the student based on the condition or status of the student's counters. Note that there are three sections to this instruction. (e.g., br e15 // c5 // +4). The first section lists the question number to which the student is to be branched; the second section lists the counter that is being utilized; and the third section is a constant. The contents of the counter are automatically added to the constant by the computer. If their sum is zero or negative, the student is branched to the question specified in the first section. If not, this instruction is ignored. Thus, the branch depends on the condition of the counter. For example, in Appendix A, page 46, statement numbers e2-8 and e2-9 read:

8. br e3 // c5 // +3

9. br e6

This means that the author wishes to branch the student (conditionally) to question e3 if the sum of the contents of counter five (c5) and +3 is either zero or negative. As counter five in this section is being utilized to count the number of incorrect responses made by a student (by adding minus 1 for each incorrect response), this instruction tells the computer to send the student

to question e3 if he has made 3 *or more* incorrect responses: otherwise send him on (br e6) to question e6 (an *unconditional* branch).

fn - This operation code was utilized to *edit* out certain characters from student responses. (In effect, it edits student typing errors). Thus, the statement:

fn edit ls // all

tells the computer to remove all up and down shifts, extra spaces, and carriage returns from the student's answer, and pack the remainder of the message together. After the student's answer is edited, it will then be compared with the previous "ca", inserted by the author. If the student response agrees exactly with that "ca", it is accepted as a correct answer. For example: The correct response (ca) to a particular question is the word "progression". If the student were to type the word "progression" and had inadvertantly placed spaces before or after "progression", prior to pressing the EOB, his answer would be incorrect. The course statement "edit ls // all" corrects this answer by removing the spaces from the student's response prior to comparing it with the programmed "ca".

In the same manner the course statement "edit la // all" operat4s to remove up and down shifts, extra spaces and carriage returns from the *author's* programmed "ca" prior to comparing it with the student's response. For example: suppose the correct answer to a particular question was 3 1/2 and the author had programmed it as a "ca" *in that format*. If the statement "edit la // all" had not been used, and a student typed 31/2 (omitting the space between the 3 and the 1), the computer would *not* accept his response as a correct answer. Including the

"edit la // all" alleviates this problem by removing the space in the author's programmed "ca" before comparing it with the student's response. (It is conceivable that the student may have actually intended his answer to be 31/2 which would be an erroneous response, but it is not believed likely that such a gross error would be made).

Thus it is recommended that both "edit ls // all"and the "edit la // all" codes be utilized following each "ca" operation code. It is important to realize, however, that although these operation codes are utilized as recommended and will alleviate possible spacing problems in student responses, the author must still anticipate all possible forms of correct answers which might be utilized by the student. (i.e. 3.5 vice 3 1/2).

The "fn" code may also be utilized to program the computer to accept mathematical responses within certain limits. For example: If the correct answer to a question is 1/3, using the "fn" code the author may program the computer to accept answers such as 0.3, 0.33, or 0.333 by simply placing the following course statement after the "ca":

```
fn  limit lc  //  .30  //  .34
```

This means that any answer between .30 and .34, inclusive, will be acceptable to the computer.

Although each of the authors utilized the "Crowder method" of branching in the development of his program, it is interesting to note that there was a wide variance in the employment of the counters and branching capabilities of the IBM system. For example, the author of Sections A and B (Appendix A, pages A2-21 , employed the counters for incorrect responses to questions

which he believed to be particularly important. If the student made more than one incorrect response to a question, he was only penalized once for that particular question. This author devised his course so that the better student followed the main track of the course and consequently received far fewer questions than the weaker student. Conversely, the weaker student (determined by the number of incorrect responses indicated on the counter) was branched to various remedial subroutines for extra instruction or, if the subroutine proved to be unsuccessful, was told to reread the textual material. Since his program included remedial subroutines for the weaker students, this author would only give one or two hints on any particular question before telling the student the correct answer.

The author of Section C used essentially the same system except that he attempted to keep all the students on the main track of the program as long as possible, until finally, again based on the number of incorrect responses indicated on the counter, he felt it necessary to branch the student to a remedial subroutine. This author averaged one hint per question prior to presenting the student with the correct answer. His segment of the course included two remedial subroutines, (the flow charts for this section are contained in Appendix F, pages 12-17) whereas the first author employed six remedial subroutines in Section A and seven in Section B.

Sections D and E were constructed utilizing the counters for both correct and incorrect responses. Using this approach, the brighter student would remain in the main program based on the total number of correct responses that he had accumulated. (Essentially, he would have to answer each question correctly the first time in order to keep on the main program). In this section the counter for incorrect responses was utilized for every

incorrect response that a student made to a question. This author generally utilized more hints than the other two authors and employed these hints primarily in the main stream of his program. Thus, the weaker student would, hopefully, eventually deduce the correct answer to the more difficult questions, but because his counter indicated that he had accumulated many errors, he would be branched to remedial questions. In this manner the weaker student receives far more instruction than the average student, and the average student more than the better student.

In retrospect, it was determined that all three authors independently employed essentially the same "philosophy". Each author said to himself, "How do I teach a student this concept? If he can't answer this question correctly, how can I program the course material so that he eventually will be able to understand the concept... Should I branch him to an easier question, explain the concept to him in a different manner, or tell him to reread the text?"

Thus, the individual programs were essentially "intuitively" constructed, and the variances in branching can be attributed primarily to the author's subjective evaluation as to the complexity of the subject matter. The limited amount of testing that has been accomplished has not indicated that any one method was superior to the other two.

The remainder of the Coursewriter language explanations in the manual are self-explanatory. The computer is very good about not accepting statements containing incorrect procedures, and will advise the author immediately of his errors; so an author need not worry about inadvertently "destroying his program."

One might gather from reading the last two chapters that perhaps "programming" is too difficult and time consuming a process to be worth serious consideration by a teacher. The authors in describing the

capabilities and limitations of the system had not intended to convey this impression. Granted, it does require a lot of effort, but then again, a great deal of thought and effort is necessary in developing a "good" classroom lecture. Once properly constructed, a program can be utilized repeatedly and transferred between schools. Despite the difficulties encountered in this study, it is still believed that CAI has considerable potential in the field of education.

CHAPTER V

Summary of Study Results

The result of this study was the development of a programmed course of instruction in arithmetic and geometric progressions.

Table 1. presents a summary of the techniques utilized in designing this course. The table includes a brief synopsis of the current opinions of the study group regarding the various programming techniques employed and some unanswered questions which arose during the development of the program.

It is important to remember that the opinions and questions derived from this study are based on the assumption, that; Programmed Instruction methods are an effective means of teaching in certain situations.

An additional, and more basic, unanswered question than any of those listed in Table 1., is the one which questions this basic assumption-----Is programmed instruction an effective means of teaching in certain situations?; and a corollary to that question is...If so, what are these situations?

Table 1.

Techniques Utilized in Course Design

Techniques	Current Group Opinions	Unanswered Questions Posed
BRANCHING	1. Provides individualized instruction. 2. Challenges all students. 3. Utilizes computer's decision-making capability. 4. Results in a complex program.	1. Is branching helpful? 2. When should a student be branched? 3. What instruction should a student receive in a branch? 4. When should the student be returned to the "main-stream"? 5. Where should the student re-enter the "main-stream"?
CONSTRUCTED TYPE RESPONSES	1. Requires "recall" vice "recognition". 2. Easy to program. 3. Decreases chance of guessing correctly.	1. What "information" should a student receive when he constructs an incorrect response? 2. How much of a hint should a student receive?
USE OF HANDOUT	1. Assists students in transitioning from books to CAI. 2. Easier to read than the typewriter print-out. 3. Provides student with a set of notes.	1. How much course material should be included in the handout? 2. Should a handout be used?

Table 1. (Continued)

ALTERNATING BETWEEN HANDOUT AND "TEACHING MACHINE"	1. Provides a desirable break in study routine. 2. Ensures greater student retention.	1. Is this "cycling" beneficial?
USE OF HUMOR	1. Assists in maintaining student interest in subject matter. 2. Might irritate some students. 3. Might overly amuse a student. 4. As a result of 2. and 3., student's learning processes might be adversly affected.	1. Is humor "irrevelant" material? 2. Does humor maintain student interest in subject matter? 3. If so, how much and what type of humor is beneficial?
NON-UNIFORMITY OF PROGRAM CONSTRUCION METHODS	1. Individual experimentation provided broader group experience in time available. 2. This experience resulted in broader author understanding of alternative construction methods. 3. One "BEST" method should be determined and used throughout the entire course.	1. What is the "BEST" method?

CHAPTER VI

Conclusions and Recommendations

Conclusions

It is concluded that this study has increased, to some degree, the growth pattern of computer assisted instruction through the development of a programmed course of instruction in arithmetic and geometric progressions and that a necessary "working" program is now available.

Due to the inexperience of the authors in this field, further development and changes will be required to evaluate its further potential in the overall CAI program. It is finally concluded that the use and evaluation of the program will contribute to a more intelligent decision when the time for a final decision on the value of computer assisted instruction comes.

Recommendations

Recommendations resulting from this study can be subdivided into four areas:

A. The use of the developed program in evaluating the IBM-CAI system at this school.

B. The areas for further study at the U. S. Naval Postgraduate School.

C. The recommended methods to be followed in conducting future similar studies.

D. Recommendations for changes to the IBM-CAI System equipment.

1. The use of the developed program to evaluate the IBM-CAI System.

It is strongly recommended that:

a. This program be tested and revised as necessary prior to being utilized in a final evaluation test.

b. Initial testing and revision be accomplished by tutorial arrangement in which the author unobtrusively observes the student's response/questions as he progresses through the program.

c. A series of tests be conducted using control groups, to determine the validity of the program; some groups receiving the Arithmetic and Geometric Progressions course by using the CAI System, and some groups receiving the Arithmetic and Geometric Progressions course by the normal instructor-lecture method. The first control test could "highlight" areas for new authors to further develop this program.

d. An unbiased examination be utilized as a criterion (test of preferredness).

2. The areas for further study at the U. S. Naval Postgraduate School.

It is strongly recommended that:

a. Students who are interested in Computer Assisted Instruction programming, develop programs for other phases of the basic mathematics review course offered at the Postgraduate School.

3. The recommended methods to be followed in conducting future similar studies.

It is strongly recommended that:

a. Sufficient time be planned for when writing a program.

b. A professor-student combination be used for program development.

This would combine the professor's "teaching" experience with the student's current "learning" experience.

c. The background literature in the areas of programmed instruction and computer assisted instruction be reviewed thoroughly prior to starting the project.

d. Prospective CAI programmers talk to other known authors of "programmed instruction" courses, if possible.

e. The IBM Computer Assisted Instruction System manuals be studied thoroughly.

f. An author practice with the 1052 Printer-Keyboard using sample problems prior to programming his course.

g. The desired student terminal behavior level be established.

h. The Flow Charts and the program be constructed concurrently.

i. The program be typed into the computer in sections and checked for programming accuracy at the completion of each section.

j. The program be tested using students and revised in the light of their responses and comments.

4. Changes to the IBM-CAI System equipment. (These recommendations cover "nice-to-have" items from the standpoint of convenience, but are not considered essential for the use of this system).

It is recommended that:

a. The PROCEED light be removed entirely or the OFF period be reduced considerably.

b. The "blocks-of-print" that the computer will accept be lengthened as much as possible.

c. The "EOB" and "Cancel" functions each be made a SINGLE key operation.

d. A "Student Comment" function be provided in the system. (This function would provide the student with the capability of typing comments about the course material into the computer; the author/instructor could then obtain these comments on a printout from the computer to aid in revising his program.

* * * * *

```
sign off
you have been signed off
```

FOOTNOTES

[1] Lawrence M. Stolurow and Daniel Davis, Teaching Machines and Computer-Based Systems, (Technical Report No. , Revised Draft, Office of Naval Research Contract No. 3985(04), University of Illinois, Training Research Laboratory, 1964), p. 6.

[2] John E. Coulson, ~~Five~~ Major Obstacles to the Growth of Programmed Instruction in Education, (SP-1944), (Santa Monica: System Development Corporation, 1965), p. 4.

[3] Ibid.

[4] Jerome P. Lysaught and Clarence M. Williams, A Guide to Programmed Instruction, (New York: John Wiley and Sons, Inc., 1963), p. 5.

[5] Ibid., p. 6.

[6] Werner J. Koppitz, "The Computer and Programmed Instruction," Datamation, (November, 1963), p. 51.

[7] Stolurow, op. cit., p. 5.

[8] Lysaught, op. cit., p. 6.

[9] Ibid., p. 8.

[10] Arthur A. Lumsdaine, "Some Differences in Approach to the Programming of Instruction," Programmed Learning, Evolving Principles and Industrial Applications, (Ann Arbor, Michigan: The Foundation for Research on Human Behavior, 1961), pp. 39-45.

[11] Koppitz, op. cit., p. 51.

[12] Donald Cook and Francis Mechner, "Fundamentals of Programmed Instruction," Applied Programmed Instruction, Stuart Margulies and Lewis D. Eigen (ed.), (New York: John Wiley and Sons, Inc., 1962), p. 3.

[13] Ibid.

[14] Computer Assisted Instructions: IBM 1401, 1440, or 1460 Operating System, (File No. 1401/1440-48, Form C24-3253-1. Endicott, New York: IBM Product Publication, 1964), p. 5.

[15] Coulson, *Present Status and Future Prospects of Computer-Based Instruction*, (SP-1629), p. 1.

[16] *Ibid*.

[17] *Ibid*.

[18] *Ibid*., p. 2.

[19] Ibid., pp. 7-10.

[20] Lumsdaine, *op*. *cit*., p. 44.

[21] Statement by John E. Coulson, personal interview.

[22] Coulson, *Five Major Obstacles to the Growth of Programmed Instruction in Education*, (1965), p. 4, 5.

[23] Harry F. Silberman, John E. Coulson, *et al*., *Final Report*: *Use of Exploratory Research and Individual Tutoring Techniques for the Development of Programming Methods and Theory*, (TM-895/200/00), (Santa Monica: System Development Corp., 1964), p. 41.

[24] Statement by John E. Coulson, personal interview.

[25] *Ibid*.

[26] Coulson, *Five Major Obstacles to the Growth of Programmed Instruction in Education*, (1965), p. 5.

[27] Lumsdaine, *op*.*cit*., p. 38.

[28] John E. Coulson, Don D. Bushnell, John E. Cogswell, "Computer-Based Instructional Systems," *Applied Program Instruction,* (1962), p. 109.

BIBLIOGRAPHY

A. BOOKS

1. Bettinger, Alvin K., and John A. Englund. *Algebra and Trigonometry*. Scranton: International Textbook Company, 1960.

2. Cissel, Robert, and Thomas J. Bruggeman. *Mathematics for Business and Economics*. Boston: Houghton Mifflin Company, 1962.

3. Chrystal, G. *Algebra*. New York: Chelsea Publishing Company, 1959.

4. Chrystal, G. *Algebra, Part II*. New York: Chelsea Publishing Company, 1959.

5. Dubisch, Roy., Vernon E. Howes, and Steven J. Bryant. *Intermediate Algebra*. New York: John Wiley and Sons, Inc., 1962.

6. Durell, Clement V. *Advanced Algebra, Volume I*. London: G. Bell and Sons, Ltd., 1947.

7. Durell, Clement V., and A. Robson. *Advanced Algebra, Volume II*. London: G. Bell and Sons, Ltd., 1947.

8. Fine, Henry Burchard. *A College Algebra*. Boston: Ginn and Company, 1904.

9. Fry, Edward B. *Teaching Machines and Programmed Instruction*. New York: McGraw-Hill Book Company, Inc., 1963.

10. Graham, Palmer H., and F. Wallace John. *Advanced Algebra*. New York: Prentice-Hall, Inc., 1942.

11. Hall, J. A. P. (ed.). *Computers in Education*. New York: The Macmillan Company, 1962.

12. Johnson, Richard E., and Fred L. Kiokemeister. *Calculus with Analytic Geometry*. Boston: Allyn and Bacon, Inc., 1958.

13. Knebleman, Morris S., and Tracy Y. Thomas. *Principles of College Algebra*. New York: Printice-Hall, Inc., 1946.

14. Lysaught, Jerome P., and Clarence M. Williams. *A Guide To Programmed Instruction*. New York: John Wiley and Sons, Inc., 1963.

15. Margulies, Stuart, and Lewis D. Eigen. *Applied Programmed Instruction*. New York: John Wiley and Sons, Inc., 1962.

16. Meir, Robert C., and Stephen H. Archer. *An Introduction to Mathematics for Business Analysis*. New York: McGraw-Hill Book Company, Inc., 1960.

17. Miller, Fredric H. *College Algebra and Trigonometry*. New York: John Wiley and Sons, Inc., 1945.

18. Moore, Charles N. *Summable Series and Convergence Factors*. (American Mathematical Society Colloquium Publications, Volume XXII). New York: American Mathematical Society, 1938.

19. Rider, Paul R. *First-Year Mathematics for College*. New York: The Macmillan Company, 1962.

20. Rider, Paul R. *College Algebra*. New York: The Macmillan Company, 1940.

21. Rose, Israel H. *Algebra*. New York: John Wiley and Sons, Inc., 1963.

22. Smail, Lloyd L. *Elements of the Theory of Infinite Processes*. New York: McGraw-Hill Book Company, 1923.

23. Stones, John C., and Virgil S. Mallory. *A Second Course in Algebra*. Chicago: Benj. H. Sanborn and Company, 1939.

24. Van Voorhis, Walter R., and Chester W. Topp. *Fundamentals of Business Mathematics*. Englewood Cliffs, New Jersey: Prentice-Hall, Inc., 1955.

25. Whyburn, William M., and Paul H. Daus. *Algebra for College Students*. New York: Prentice-Hall, Inc. 1955.

26. Wilczynski, E. J. *College Algebra with Applications*. Boston: Allyn and Bacon, 1942.

B. PUBLICATIONS OF THE GOVERNMENT, LEARNED SOCIETIES, AND OTHER ORGANIZATIONS

27. Bushnell, Don D. *Educational Data Processing and Public Education* (SP-1400). Santa Monica: System Development Corp., 29 October 1963.

28. Bushnell, Don D. *The Computer in the Classroom* (SP-601). Santa Monica: System Development Corp., 14 November 1961.

29. Bushnell, Don D. *The Effects of Electronic Data Processing in Future Instructional Systems* (SP-1118/001/00). Santa Monica: System Development Corp., 27 March 1963.

30. Carter, Launor F. *Computers: Their Impact on Instruction, on Educational Planning, and on the Curriculum* (SP-1628). Santa Monica: System Development Corp., June 1, 1964.

31. Cogswell, John F., and John E. Coulson. *Effects of Individualized Instruction on Testing* (SP-1829). Santa Monica: System Development Corp., 1965.

32. *Computer Assisted Instruction: IBM 1401, 1440, or 1460 Operating System*. File Number 1401/1440-48, Form C24-3253-1, Endicott, New York: IBM Product Publication, March, 1965.

33. Coulson, John E. Automation, Cybernetics, and Education (SP-1964). Santa Monica: System Development Corp., 1965.

34. Coulson, John E., et al. Effects of Branching in a Computer Controlled Auto Instructional Device (TM-617). Santa Monica: System Development Corp., 1965.

35. Coulson, John E. Five Major Obstacles to the Growth of Programmed Instruction in Education (SP-1944). Santa Monica: System Development Corp., 1965.

36. Coulson, John E. Present Status and Future Prospects of Computer-Based Instruction (SP-1629). Santa Monica: System Development Corp., 1964.

37. Coulson, John E. Programmed Decisions In Programmed Instruction (SP-933/001/00). Santa Monica: System Development Corp., 1962.

38. Coulson, John E. Responsiveness as an Organizing Principle in the Analysis and Design of Education System (SP-1322). Santa Monica: System Development Corp., 1963.

39. Coulson, John E., and John Cogswell. Systems Analysis In Education (SP-1863). Santa Monica: System Development Corp. 1965.

40. Coulson, John E., and Harry F. Silberman. Results of Initial Experiment in Automated Teaching. (SP-73). Santa Monica: System Development Corp. 1959.

41. Egbert, Robert L. The Computer in Education: Malifactor or Benefactor. AFIPS-FJCC-Vol. 24. Santa Monica: System Development Corp., 1963.

42. Finn, James D., and Donald G. Perrin. Teaching Machines and Programmed Learning. United States Department of Health, Education, and Welfare, Office of Education, 1962.

43. Gruenberger, F. J. What Should We Compute? (P-2786). Santa Monica: The RAND Corp., 1963.

44. Lysaught, Jerome P. Programmed Learning. Ann Arbor: The Foundation for Research on Human Behavior, 1961.

45. Silberman, Harry F., John E. Coulson, et al. Final Report: Use of Exploratory Research and Individual Tutoring Techniques for the Development of Programming Methods and Theory (TM-895/200/00). Santa Monica: System Development Corp., 1964.

46. Stolurow, Lawrence M., and Daniel Davis. Teaching Machines and Computer-Based Systems. Technical Report No. 1, Revised Draft, Office of Naval Research Contract No. 3985(04), University of Illinois, Training Research Laboratory, 1964.

47. Strollo, Theodore R. *A Generalized Teaching Machine Decision Structure with Application to Speed Reading*. Technical Report No. 7, Air Force Systems Command Contract No. AF-19(628)2407, Massachusetts Institute of Technology, Operations Research Center, 1964.

48. Yens, David P., and Harris H. Shettel. *Operational Specification for Computer-Directed Instruction in the Operational Training Capability Query Language for System 473L, United States Air Force Headquarters*. Technical Documentary Report No. ESD-TDR-64-511, Air Force Systems Command Contract No. AF-19(628)-2935, Pittsburg: American Institutes for Research, 1964.

C. PERIODICALS

49. Buckley, Noel. "Learning: Return to Reality", *DUN'S REVIEW AND MODERN INDUSTRY*, May 1964.

50. Bushnell, Don D. "Computer-Mediated Instruction--A Survey of New Developments", *Computers and Automation*. 14, No. 3 (March, 1965), 18-20.

51. Coulson, John E., and Harry F. Silberman. "Effects of Three Variables in a Teaching Machine", *Journal of Applied Psychology*, 51. No. 4 (1960), 135-143.

52. Coulson, John E., *et al*. "Effects of Branching in a Computer Controlled Auto-Instructional Device", Journal of Applied Psychology, 46, No. 6, (December, 1962), 389-392.

53. Dennis, Jack B. "A Multiuser Computation Facility for Education and Research", *Communications of the ACM*, 7, No. 9 (September, 1964), 521-529.

54. Feurzeig, Wallace. "Towards More Versatile Teaching Machines", *Computers and Automation*, 14, No. 3, (March, 1965), 22-25.

55. Koppitz, Werner J. "The Computer and Programmed Instruction", *Datamation*, November, 1963, . 50-56.

56. Rogers, James, and Donald Bullock. "The Application of Programmed Instruction in the Computer Field", *Computers and Automation*, XII, No. 4, (April, 1963), 22-25.

57. Silvern, Gloria M. "Programmed Instruction Materials for Computer Programming--A Survey", *Computers and Automation*, 14, No. 3 (March, 1965), 26-32.

58. Silvern, Leonard C. "An Examination of Programmed Learning in Data Processing", *Data Processing for Education*, Detroit: American Data Processing, Inc., November, 1964.

D. UNPUBLISHED MATERIALS

59. Regan, James D. "Computer Controlled Teaching Machines, A Survey." Unpublished term paper, The United States Naval Postgraduate School, Monterey, California, 1964.

60. Stogis, Peter D. "The Digital Computer As An Automatic Teaching Device." Unpublished Master's thesis, The United States Naval Postgraduate School, Monterey, California, 1965.

E. AN ANNOTATED BIBLIOGRAPHY

61. Schramm, Wilbur. The Research on Programmed Instruction. Institute of Communication Research, Stanford University, California, Contract with Office of Education, United States Department of Health, Education, and Welfare, National Defense Act, Title VII, Part B, OE-3-16-004, United States Government Printing Office, Washington: 1964.

APPENDIX A

Computer Assisted Instruction Course
in
Arithmetic and Geometric Progressions

(Computer Print-out)

[illegible]

[illegible]

[illegible]

[illegible]

[illegible]

```
start
Intro
    1       rd      WELCOME ABOARD!

    2               You are about to get underway on one of the very latest modes of teaching.
    3           I think you'll find this experience not only educational, but also most enjoyable.
    4           (Can any other professor make that statement?!)

    5               You may find that my tongue is a bit short ...........but my patience is
    6           very long.  So don't let my comments rattle you.  Take your time and enjoy yourself.

    7               When you are ready to get underway, press the FOR buttons.

    8               Glad to have you aboard!


a0
    1                               ARITHMETIC AND GEOMETRIC PROGRESSIONS


    2                            Section A   INTRODUCTION AND DEFINITIONS



A1
    1       QU A ________ is a group or collection of definite distinct objects.

    2       ca set
    3       fn editls    //all
    4       ty Correct.  The order of arrangement is not important in a set.

    5



    6       wa sequence
    7       wb progression
    8       fn editls    //all
    9       ty No.  A sequence is a set of numbers in some definite order.  I'm looking for
          a more general term.  Try again.

   10



   11       un Wrong.  Try again.

   12       un No.  The answer is set.  A set is a group of definite distinct objects.  You can

   13           have a set of birds, rocks, guns, numbers ----- anything.  It is just a definite

   14           distinct group of some particular objects.


   15       br a2
a2
    1       qu A group or collection of numbers in no definite order of arrangement
       is called a _______ of numbers.

    2       ca set
    3       fn editls    //all
    4       ty Right.  The clue here is that the numbers are not in any definite order.

    5           In order for a set to be a sequence it must be arranged in definite order.

    6



    7       br a8        //cl//2
    8       cb group
    9       cb collection
   10       cb bunch
   11       cb wad
   12       fn editls    //all
   13       ty Yeh.  That's true enough, but the answer I prefer is set.
```

```
   14      br a8          //c1//2
   15      wa sequence
   16      wb progression
   17      fn editls    //all
   18      ty Wrong.  Note that the numbers in question are not in any definite order.  Try again.

   19




   20      un You must be kidding.  Try again.

   21      un The Bureau must be kidding.  The correct answer is set.  A group of any definite

   22         distinct objects is called a set.  A group of numbers is called a set of numbers.

   23         Order of arrangement is not important in a set.



   24      br a1
a3
    1      qu A set of numbers in some definite order is called a _______.

    2      ca sequence
    3      cb progression
    4      cb sequence of numbers
    5      cb progression of numbers
    6      fn editls    //all
    7      ty That's right.  Good head work there, Charlie.

    8






    9      ad c1//c2
   10      ad -c1//c1
   11      br a6
   12      wa set
   13      fn editls    //all
   14      ad c1//c2
   15      ad -c1//c1
   16      ty True, but that's not really too profound, Charles.  Think and try again.

   17




   18




   19      un No.  Note that the set of numbers in question is arranged
        in some definite order.  Try this one.


   20      br a4
a4
    1      qu A _______ of numbers is a set of numbers in some definite order.

    2      ca sequence
    3      cb progression
    4      fn editls    //all
    5      ty Correct.  Now try the first one again.

    6





    7      br a3
    8      wa set
    9      fn editls    //all
   10      ty Less than profound, Charlie.  Read the statement and try again.

   11





   12      un Negative, Charlie, think about this and we'll try it from another angle.

   13




   14      br a5
```

```
a5
       qu A progression or sequence of numbers is a ________ of numbers in some definite order.

       ca set
       cb group
       cb collection
       fn editls    //all
       ty Fantastic mind!  Your powers of retention amaze me.



       br a3
       un I'll forget you said that.  Try again.
       un Check the doppler on your typewriter, buddy.  I think it's stuck.  We'll try this
              one more time.
       un Time's up.  See you when you get back from Vietnam.  The correct answer here is set.



       br a5a
a5a
       rd I think you'd better go back and review the text again, and then we'll take another
          stab at these questions.

       br a1
a6
       qu The individual numbers of the sequence or progression are called ________.

       ca terms
       fn editls    //all
       ty Way to go, Dick Tracy.  You got another one right.



       br a7
       cb elements
       fn editls    //all



       ty Gee, I never thought of that.  OK, but the preferred answer is terms.
       un Wrong.  Think of what the individual numbers in the progression 1, 2, 3, 4, 5 are
          called.  Try again.
       un When was the last time you stood a mid-watch?  Be careful.  I'm losing my patience.  One more try.
       un Aaaaaaaaahhhhhhhh!!  Excuse me.  The correct answer is terms.  Each individual
          number in a sequence is a term.

       br a7
a7
       qu A sequence of numbers is a set of numbers in some ________order.

       ca definite
       cb distinct
       cb particular
       cb specific
       cb exact
       fn editls    //all
       ty Beautiful.  It takes a lot of order to make a set a sequence.



       br a8
       cb defenite
```

```
     12    fn editls    //all
     13    ty OK, but your spelling is atrocious.  It's d-e-f-i-n-i-t-e.

     14    wa random
     15    fn editls    //all
     16    ty Random?  You're not even supposed to know what that word means, and anyway it's wrong.  Try again.

     17    un How do you say wrong in Vietnamese?  The order of arrangement is important in a

     18          sequence.  Try again.

     19    un No, the correct answer is definite.  The terms of a sequence must be arranged in a

     20       definite order.  This is the key factor which makes a set a sequence.  Order is not

     21       important in a set --- it is important in a sequence.


     22    br a3
a8
      1    qu Is 2, 4, 6, 8, 10 a set?

      2    ca yes
      3    fn editls    //all
      4    ty Correct.  Any definite group of numbers is a set.

      5



      6    ad -c1//c1
      7    br a9
      8    wa no
      9    fn editls    //all
     10    ad -c1//c1
     11    ad -1//c1
     12    ty Wrong.  This is a set.  Any definite group of numbers is a set.

     13



     14    br a8a
     15    un If you do that again, I'll shock you.  Just say yes or no.
a8a
      1    qu Is 40, 9, 18, 61, 50 a set?

      2    ca yes
      3    fn editls    //all
      4    ty Right.  I think you've got it.

      5



      6    br a9
      7    wa no
      8    fn editls    //all
      9    ad -1//c1
     10    ty Wrong again.  I think we'd better go back and look at the definition again.

     11



     12    br a1
     13    un Knock it off, Charlie.  Just say yes or no.
a9
      1    qu Is 2, 4, 6, 8, 10 a sequence?

      2    ca yes
      3    fn editls    //all
      4    ty Right, because all of the terms are in a definite order.  Each term exceeds the

      5       preceding one by 2.



      6    wa no
      7    fn editls    //all
      8    fn editla    //all
      9    ad -1//c1
     10    ty Wrong.  It is a sequence because the terms are arranged in a definite order.

     11       Each term exceeds the preceding one by 2.
```

```
   12      br a10
   13      un This is a yes or no question, Mort.  Choose one.
a10
    1      qu Is 1, 2, 3, 4, 5 a progression?

    2      ca yes
    3      fn editis    //all
    4      ty Roger.  The terms are in a definite order.  Over.

    5




    6      wa no
    7      fn editis    //all
    8      ad -1//c1
    9      ty Sure it is.  It's a progression (sequence) because the terms are arranged in a

   10           definite order.  Each term exceeds the preceding one by 1.  Let's try another one.

   11




   12      br a11
   13      un Come on, Judge, make a decision.....YES or NO?
a11
    1      qu Is 1, 7, 3, 2, 9,  a progression?

    2      ca no
    3      fn editis    //all
    4      ty Correct.  The terms in this set are not arranged in any definite order.  Well done.

    5



    6      br a11b      //c1//2
    7      br a17
    8      wa yes
    9      fn editis    //all
   10      ad -1//c1
   11      ty No, no.  This set does not fill the bill for a progression or sequence

   12           because the terms are not arranged in any definite order.


   13



   14      br a11a      //c1//2
   15      br a17
   16      un Try yes or no, Charlie.  I ain't programmed for garbage.
a11a
    1      rd You've missed at least two of the last three questions.  I think we'd better

    2         review the examples in the text.  You go ahead and start.  I'll be back in a

    3         minute.  I'm going to the head.



    4      ad -c1//c1
    5      br a12
a11b
    1      rd Even though you got the last one right, you have missed at least two of the example

    2         questions.  Therefore, I think you'd better review the text, and then we'll look at

    3         some more problems.



    4      ad -c1//c1
    5      br a12
a12
    1      qu OK,here we go again.  Is 1, 7, 4, 2, 12 a set?

    2      ca yes
    3      fn edit is   //all
    4      ty Roger.  Well done. Over.


    5      un Wrong.  This is a [illegible] numbers is a set regardless of their order.
```

```
      6        ad -1//c2
      7        br a13
a13
      1        qu Is 15, 6, 20, 82, 4, 43 a progression?


      2        ca no
      3        fn editls    //all
      4        ty Correct.  The terms are not in any definite order.  Consequently this set is not

      5           a sequence or progression.



      6        br a17
      7        un No, this is not a progression because the terms are not arranged in any definite order.



      8        ad -1//c2
      9        br a14       //c2//2
     10        br a17
a14
      1        qu Is 5, 10, 15, 20, 25 a progression?
      2        ca yes
      3        fn editls    //all
      4        ad -c3//c3
      5        ty Right.  I think you're catching on!



      6        br a14a
      7        un Wrong.  This is a progression or sequence of numbers.  The terms are arranged in a

      8           definite order, each term being 5 greater than the preceding one.  Remember we are

      9           using the words progression and sequence synonomously.



     10        ad -c3//c3
     11        ad -1//c3
     12        br a15
a14a
      1        qu Do you feel that you now basically understand the concept of sets and progressions?
      2        ca yes
      3        fn editls    //all
      4        br a17
      5        wa no
      6        fn editls    //all
      7        br a15
a15
      1        qu Is 10, 5, 0, -5, -10 a progression?


      2        ca yes
      3        fn editls    //all
      4        ty Correct.  The terms of a progression may take on any value (positive, negative,

      5           or zero) as long as they are arranged in a definite order.



      6        br a17
      7        un Wrong.  This is a progression.  The terms of a progression may take on any value

      8           (positive, negative, or zero) as long as they are arranged in a definite order.



      9        ad -1//c3
     10        br a17       //c3//2
a16
      1        qu Is -10, -10 1/2, -11, -11 1/2, -12 a progression?


      2        ca yes
      3        fn editls    //all
      4        br a17
      5        un No, Charlie, old buddy, you've missed the last two questions ----- That Is a

      6           progression.  Each term is 1/2 less than the preceding one.  Man!  I've got a headache.



      7        br a16a
a16a
      1        qu Do you want to go back and study the text some more?
      2        ca no
      3        fn editls    //all
      4        ad -c3//c3
      5        br a17
      6        un I think that's a wise decision.  Let me know when you're ready to start again.
```

```
     7        [illegible]
     8        br [illegible]
a17
     1        qu Is a, a^2, a^3, a^4, a^5, a^6 a progression?

     2        ca yes
     3        fn editls    //all
     4        ad -c2//c2
     5        ty Right.  Fantastic perception!  ?Z!

     6        un Wrong.  It is a progression.  The terms are in a definite order, each being found
     7           by multiplying the preceding term by the constant a.

     8        ad -c2//c2
     9        ad -1//c3
    10        br a14       //c3//2
    11        br a17a
a17a
     1        qu I think I'll ask you some new type questions ---- on second thought ---- Do you want
     2           some more examples like the ones you've just had?

     3        ca no
     4        fn editls    //all
     5        ad -c3//c3
     6        br a18
     7        wa yes
     8        fn editls    //all
     9        ty OK, we'll go back and take a look at some of our previous examples.

    10        ad -c3//c3
    11        br a8
a18
     1        qu In the sequence a_1, a_2, a_3, a_4, a_5, a_2 is called a ________.

     2        ca term
     3        cb terms
     4        fn editls    //all
     5        br a20
     6        wa subscript
     7        fn editls    //all
     8        ty No.  I didn't ask you what 2 was called.  I said a_2.  Try again.
     9        un No, no.  a_2 is called a term.  All individual numbers in a sequence are called terms.

    10        br a19
a19
     1        qu In the progression 2, 4, 6, 8, 10, 12 the number 6 is called a ________.

     2        ca term
     3        cb terms
     4        fn editls    //all
     5        ty I think you've got it!

     6        br a20
     7        cb element
     8        fn editls    //all
     9        ty Yeh, yeh, but the preferred word is term.

    10        br a20
    11        un No, Charlotte, honey, that's not correct.  Let me explain it.  6 is a term.
    12           All of the individual numbers are called terms.  The progression 1, 2, 3, 4, 5
    13           is a five term progression.  1 is the first term, 2 is the second term, etc..
    14           I do hope that clears up this little misunderstanding.

    15        br a20
a20
     1        qu The number 2 in a_2 is called a ________.

     2        ca subscript
     3        fn editls    //all
     4        ty Correct.  The subscript denotes the order in which the terms are arranged.

     5        br a22
     6        un I think you just blew a transistor in my doppler box.  Uuuuhhhhh!!  Think and
     7           try again.
```

8 un Wrong. It is a subscript, and it denotes the order in which the terms are arranged.

9 That is, a_2 would be the second term in its progression.

10 br a21

a21

1 qu The ______ denotes the order in which the terms are arranged.

2 ca subscript
3 fn editls //all
4 ty Roger. Over.

5 br a22
6 cb subscripts
7 fn editls //all
8 ty OK, but in the future please use singular subjects with singular verbs.

9 un Wrong. Try again.

10 un Wrong. The correct answer is subscript. For example, the numbers in the

11 sequence t_1, t_2, t_3, t_4 are subscripts and denote the order of arrangement

12 of the terms, t_1 being the first term, t_2 the second term,etc.

13 br a22

a22

1 qu In the sequence t_1, t_2, t_3, --- , t_n, ---, t_n is the ______ term.

2 ca nth
3 cb n
4 fn editls //all
5 ty Beautiful, Charlie, have a banana.

6 br a24
7 un No. t_n is the nth term as indicated by the subscript n. Let's try another one.

8 br a23

a23

1 qu In the sequence a_1, a_2, a_3, a_4, a_5, ...a_3 is the ______ term.

2 ca 3rd
3 cb 3
4 cb third
5 fn editls //all
6 ty Roger, Charles, and a_4 is the fourth term, etc., etc..

7 br a24
8 cb 3th
9 fn editls //all
10 ty 3th???? OK, but the correct spelling is 3rd.

11 br a24
12 un Charlie, old buddy, you missed this one too. That does distress me a bit. The

13 correct answer is 3rd. a_3 is the third term as indicated by the subscript 3.

14 Zap my EOB button while I try to decide what to do with you.

15 br a23a

a23a

1 rd After thinking it over, I've decided we should go back and look at some more questions

2 on terms and subscripts. Punch me, Charlie.

3 br a18

```
a24
   1       rd That is the end of the introductory section on the Coursewriter.  Great sport, eh!?!

   2          If you feel that you have the concept well in hand, then type sign off, and return
   3          to the text and study the section on finding the value of a particular term in an
   4          Arithmetic Progression.

   5          If you would like to review one of the areas noted below, just type go to followed
   6          by the label following that particular area.

   7                            Problem Area                      Label

   8                             Set                               a1
   9                             Sequence/Progression              a3
  10                             Term                              a6
  11                             Subscript                         a20


  12          If you do go back and review, then when you have completed the review,
  13          type go to a24.  This will branch you back to here, from where we may press onward.


  14       ad -c2//c2
  15       ad -c3//c3
 ns1
```

```
b[illegible]
    1       rl                    section [illegible] of ARITHMETIC PROGRESSION

b1
    1       qu An ________ is a sequence of numbers in which each term after the first is formed by adding

    2          a fixed quantity called the common difference to the preceding term.


    3       ca ap
    4       cb a.p.
    5       cb arithmetic progression
    6       fn editls    //all
    7       ty You have arrived at the correct solution.  Goody!


    8       ad -c2//c2
    9       un Wrong.  The correct answer is arithmetic progression or AP.  Think about it for a minute

   10          and then let's try another one.


   11       ad -c2//c2
   12       ad -1//c2
   13       br b2
b2
    1       qu In an AP the fixed quantity added to each term to obtain the next term is called the ________.


    2       ca common difference
    3       fn editls    //all
    4       ty You're right, and d may be either + or -, but never 0.  Next question comin' up.


    5       br b3
    6       cb d
    7       fn editls    //all
    8       ty Correct.  d = common difference.  d may be either + or -, but never 0.


    9       br b3
   10       wa difference
   11       fn editls    //all
   12       ty That's only partially correct.  The complete answer is common difference --- meaning

   13          that the difference is common (or the same) between all terms in the AP.


   14       br b3
   15       un No.  The correct answer is common difference.

   16          d may be either + or -, but never 0.


   17       ad -1//c2
   18       br b3
b3
    1       qu The common difference between each term in an AP is denoted by the letter ________.


    2       ca d
    3       fn editls    //all
    4       ty Roger.  Over.


    5       un Wrong.  Check your typing and try again.

    6       un Wrong again.  It must not be your typing.  The letter in question is d, delta --- you dog.
    7          d may be either + or -, but never 0.


    8       ad -1//c2
b4
    1       qu t or f.  In an AP the common difference may be either a positive or a negative number.


    2       ca t
    3       cb true
    4       fn editls
    5       t
```

```
        br b4a        //c2//3
        br b5
        un Wrong.  d may be either + or -, but never 0.


        ad -1//c2
        br b4a        //c2//3
        br b5
b4a
        rd You have missed at least 3 of the last 4 questions on AP's.  I think that before we
           start the problems we'd better go back and review the text.  Let me know when you're
           ready to go again.


        br b1
b5
        qu The AP 3, 6, 9, 12, 15, 18 consists of ________ terms.

        ca 6
        cb six
        fn editls    //all
        ad -c2//c2
        ty Correct


        un No.  There are 6 terms in the AP.  Each individual number is a term.  3 is the first
           term, 6 the second term, etc..


        ad -c2//c2
        ad -1//c2
        br b5a
b5a
        qu In the AP 6, 10, 14, 18, 22 what is the value of the fourth term?

        ca 18
        fn editls    //all
        ty Roger.  I think you've got it.


        br b5b        //c2//1
        br b6
        un No ---- the value of the fourth term ---- the fourth number in the series.  What is it?

        un It never occurred to me that anyone would miss this one twice, but then I didn't know
           that you were taking the course.  The correct answer is 18.


        br b5b
b5b
        qu How many terms are there in the AP 8, 6, 4, 2, 0?

        ca 5
        fn editls    //all
        ty Great!  And you can type, too!


        br b6         //c2//1
        br b5c
        un Gads!  Here I'll help you.  There are 1, 2, 3, 4, 5 --- 5 --- 5 terms in that stupid AP!
           Maybe it's the big numbers that throw you???


        br b5c
b5c
        qu In the AP 2, 4, 6, 8, 10, 12 the value of the fourth term is 8.  What is the value
           of the fourth term?

        ca 8
        fn editls    //all
        ty 82, Dick Tracy.  Now stand by for a ram.


        br b5
        un Wha --- huh?!? --- Oh, you scared me!  I never expected to see anyone way down here.
```

```
   How in the world! Did you ever find me? Never mind! --- Read the question, sonny, and try again.

un Good grief! --- Excuse me --- I mean good grief! So, let's try this one.


br b5d
b5d
qu In the AP 1, 2, 3 there are 3 terms. How many terms are there in the AP 1, 2, 3?

ca 3
fn editls    //all
ty Yes! Now we go to the first grade.

br b5
un No, Charlie, the answer is 3. Have you ever considered becoming a PG School

   drop-out? I'll be glad to sign your chit.

br b5e
b5e
rd Go back and re-read the text, and then we'll start from scratch. You make me want to.


br b1
b6
qu In the AP 4, 6, 8, 10, 12, 14, d= _______.

ca 2
cb +2
fn editls    //all
ad -c2//c2
ty Right. 14-12 = 12-10 = 6-4 = 2, the common difference.

un Wrong, try again.

ad -c2//c2
un Wrong. I'll give you a hint. The answer is 2. 14-12 = 12-10 = 8-6 = 2, the common

   difference. Remember, d may be either + or -, but never 0.


br b7
b7
qu In the AP a, a+d, a+2d, a+3d the value of the first term, t1, is _______, and d= _______.

   (Put a comma between your answers.)

ca a,d
cb a,+d
fn editls    //all
ty That's right. Very good.

br b8
un No, you blew it. Check your typing and try again.

un Did you read the text? This is a verbatim example. Here t1=a and d=d. Simple, eh?!

br b7a
b7a
qu In the AP -6, -7, -8, -9, -10, d= _______.

ca -1
fn editls    //all
ty Roger. Now try this one.

br b6
wa 1
fn editls    //all
ty No. Check your sign and try again.

un No. d=-1. -8-(-7) = -10-(-9) = -1. Try this one.
```

```
   10      br b7b
b7b
    1      qu In the AP 2, -2, -6, -10, -14, d= ________.


    2      ca -4
    3      fn editls    //all
    4      ty Good.  Now let's try the first example again.


    5      br b8
    6      wa 4
    7      wb +4
    8      fn editls    //all
    9      ty No.  Check your sign and try again.


   10      un No.  The answer is -4, the common difference between each term in the AP.


   11      br h7c
b7c
    1      rd I think we'd better take another look at the text.  Call me when you're ready.
    2         I'll be in the head.


    3      br b5
b8
    1      rd We can find any term in an AP if we know the --
    2                      1. first term (t1)
    3                      2. common difference (d)
    4                      3. number of the term for which we are looking (n)
    5         The expression to find the value of the nth term (tn) of an AP is ---
    6                      tn = t1 + (n-1)d
    7         After you have digested this and are ready to proceed, punch me.  Over.


    8      ad -c2//c2
b9
    1      qu Find the fifteenth term (n=15) of an AP when t1=2 and d=1.


    2      ca 16
    3      cb +16
    4      fn editls    //all
    5      ty Roger.  Bravo Zulu.  Over.


    6      br b11
    7      un No.  t15 = 2 + (15-1)(1).  Try again.


    8      ad -1//c2
    9      un Wrong again.  The answer is 16.  Try this one.


   10      br b10
b10
    1      qu Find the fifteenth term of an AP whose first term is 2 and whose common difference is 1/2.

    2      ca 9
    3      cb +9
    4      fn editls    //all
    5      ty You're right!


    6      ad +1//c2
    7      br b11
    8      un No.  This is just like the last one.  t1=2, d=1/2.  Find t15.  Try it.


    9      un No.  t15 = 2 + (14)(1/2) = 2 + 7 = 9
```

```
   1      br b10a
b10a
   1      rd You really should have gotten that one right, Charlie.  I'll give you a choice ---
   2         You may go back and review the text, or you may go on from here.  However, if you
   3         go on and then miss the next one I'm going to send you back anyway.  heh, heh!  GO please.

   4      br b10b
b10b
   1      qu Do you want to go back and review?

   2      ca yes
   3      fn editls    //all
   4      ty OK, I think that's wise.  Read the section on AP's before you attempt any more questions.

   5      br b8
   6      un OK, but don't hesitate to stop and review if you ever have any questions.

   7      br b11
b11
   1      qu Find t14 in the AP -6, 2, 10, 18, ------.

   2      ca 98
   3      cb +98
   4      fn editls    //all
   5      ty Right!

   6      br b12
   7      un No.  t1=-6, d=8.  Try again.

   8      ad -1//c2
   9      un Wrong again.  t14 = -6 + (14-1)(8) = 98.

  10      br b11a      //c2//3
  11      br b12
b11a
   1      rd Charlie, old pal, I told you if you missed this one I'd send you away ------- So stand
   2         by to get underway.  Not only do I want you to read your text, but also THINK!!

   3      br b5
b12
   1      qu Find t1 when tn = t5 = 19 and d=4.

   2      ca 3
   3      cb +3
   4      fn editls    //all
   5      ty Correct.  Very good.

   6      ad -c2//c2
   7      br b14
   8      un No.  Rearrange the tn formula, and solve for t1.

   9      ad -c2//c2
~~10~~    ~~br b14~~
  11      un Wrong.        t1 = tn - (n-1)d

  12                          = 19 - (5-1)4

  13                          = 3

  14      br b13
b13
   1      qu Find t1 when t6=-13 and d=-2.

   2      ca -3
   3      fn editls    //all
   4      ty Fine.  I think you've got it now.
```

```
       5        br b14
       6        un Wrong again.  This is the same type problem as the last one --- n=6, t_n=-13, d=2.

       7                              t_1 = t_n - (n-1)d

       8           Solve for t_1.  Do it now!!!

       9        un •ɯɑπεaΣ/=--••?Δ▽   Excuse me, Charlotte.  Once again you have arrived at an incorrect answer.
      10           The correct solution here is -3.  And if you and I don't get together soon, that's going to
      11           be your grade for this course!!!  I think we'll review a bit.

      12        br b8
b14
       1        qu Find d when n=5, t_n=19, and t_1=3.

       2        ca 4
       3        cb +4
       4        fn editis    //all
       5        ty That's right!  You're doing great!

       6        un No.      d = t_n - t_1         Try again.
                                -----------
                                   n-1

       7        ad -1//c2
       8        un Incorrect.  d=4.

b15
       1        qu Find d when t_6=10 1/2 and t_1=-7.

       2        ca 7/2
       3        cb 3 1/2
       4        fn editis    //all
       5        ty Beautiful!

       6        br b16
       7        un Incorrect.  Think!  n=6  Solve for d.

       8        ad -1//c2
       9        un Wrong again.  d = t_n - t_1
                                     -----------
                                       n - 1

      10                           = 10 1/2 - (-7)
                                     -------------
                                         6 - 1

      11                           =    17 1/2       = 3 1/2 or 7/2
                                        ------
                                          5

      12        br b15a      //c2//2
      13        br b16
b15a
       1        rd You've missed the last two questions, Charles.  I think we'd better fall back and regroup.
       2           Massage the formula a bit, and try to visualize the different uses for it.  EOB please.

       3        br b8
b16
       1        qu Given the following information, find t_1.  t_9=35 and t_10=40.

       2        ca -5
       3        fn editis    //all
       4        ad -c2//c2
       5        ty Excellent!  You are thinking.  We do like that.

       6        wa -85
       7        fn editis    //all
       8        ad -c2//c2
       9        ty No.  Check the sign of d, and try again.

      10        un Incorrect.  d=5.  Try again.

      11        un No.  You have a choice here.  Either n=9 or n=10.  Solve for t_1.
```

```
        un Charlie, I have the impression that this problem has you snowed.

                        t  = t  - (n-1)d
                         1    n

                           = 40 - (10-1)5

                           = 40 - 45

                        t  = -5
                         1

           The formula will fit all of these problems.  Take your time and think them through.


        br b12
b17
        qu Given an AP where t =56 and t  =32, find t  .
                              1         17          10

        ca 85/2
        cb 42 1/2
        fn editls     //all
           I'm impressed!


        un No.  Using the given info, solve for d.  Then, using that d, find t  .
                                                                          10

        un So I've finally stumped you, eh?!  d=-3/2, n=10.  Find t  .
                                                                   10

        ad -1//c2
        un Gads!!                  t   = 56 + (10-1)(-3/2)
                                    10

                                       = 56 - 13 1/2

                                   t   = 42 1/2 or 85/2
                                    10

        br b18
b18
        qu Given an AP where t =9 and t  = 31, find t .
                              4        15            2

        ca 5
        fn editls    //all
        ty Oh, goodie!  You got another one right.


        br b18a      //c2//2
        ad -c2//c2
        br b19
        un No, first solve for d.  Then go from there.


        ad -1//c2
        un No.  There are several ways to find d.

                        t   - t
                         15    4
               31 - 8 = 22
             = ------ = ---------
               15 - 4   15=-24
                        11

                                  or


                      t  + 3d = t  = 9
                       1         4
                      t  +14d = t  =31
                       1         15
                      -------      --

                         11d      =22

                           d      = 2                    Whew!  Now find t .
                                                                          2

        un No, Charles, that's incorrect again.  From the last hint I gave you you can see that t =3.
                                                                                                 1
           Then solving the standard equation, we see that t =5.
                                                             2
```

```
     21      br b18a
 b18a
      1      qu Given that the first term of an AP is 56 and the seventeenth term is 32, find d.


      2      ca -3/2
      3      cb -1 1/2
      4      fn editls    //all
      5      ty Yes, that's better.


      6      br b19
      7      un No, Charlie, you should have gotten that one correct.  t_1=56, t_17=32, n=17.  Try again.

      8      un Again I must report that you have furnished me with an unrecognizable response.

      9         d=-3/2.  I think it best that we go back and review again.


     10      br b8
 b19
      1      qu Here's a ''thinker''.  Beginning with 2, find the 100th even number.


      2      ca 200
      3      fn editls   .//all
      4      ty Outstanding, Charlie.  Good head work.


      5      br b20
      6      un Sorry, old man,that is incorrect.  This problem can be set up as an AP where t_1=2, n=100,

      7         and d=2.  Solve for t_n.  Try it.


      8      un Hmmmmmm?  You've missed it again.  I was so sure that you'd get it that I wasn't paying any

      9         attention.  Do that again please.

     10      un Good grief!  I'm sorry I was watching that time.  You've given me a transistor ache.

     11         t_100=200, Charlotte.


     12      br b19a
 b19a
      1      qu I'll give you a choice --- and suggest an answer.  I think you should go back and review a bit,

      2         but if you prefer to go on, I'll let you.  Do you want to review?


      3      ca yes
      4      fn editls    //all
      5      br b8
      6      un OK, but if you are confused about any concepts here, don't hesitate to ask for help.


      7      ad -1//c2
      8      br b20
 b20
      1      qu Careful.  Is 2, 2, 2, 2, 2, ....... an AP?


      2      ca no
      3      fn editls    //all
      4      ty Correct, because d can never equal zero.


      5      br b21
      6      un Wrong.  Here d=0.  In an AP, d can be either + or -, but never 0.


      7      ad -1//c2
      8      br b20a      //c2//2
      9      br b21
 b20a
      1      rd Charlie, I told you you should review before proceeding.  Let's do.


      2      br b8
 b21
      1      qu OK, now let's review a bit before we knock off.


      2         When using the formula t_n = t_1 + (n-1)d to find the tenth term in a twenty term AP, n= ______.
```

```
      3     ca 10
      4     fn editls     //all
      5     ad -c2//c2
      6     ty Good, that's correct.


      7     br b22
      8     un Wrong.  n=10, the number of the term for which we are looking.


      9     ad -c2//c2
     10     ad -1//c2
     11     br b21a
b21a
      1     qu When using the formula t_n = t_1 + (n-1)d to find the value of the sixth term of an AP, n= _____.


      2     ca 6
      3     fn editls     //all
      4     ty Roger.


      5     br b22
      6     un Gads! How did you get this far in the course?  No, n=6 because we are looking for the 6th term, t_6


      7     ad -1//c2
      8     br b21b
b21b
      1     qu When using the ''term'' formula, n is simply the number of the term for which we are looking.
      2        If we are looking for the 13th term, n=13 and t_n=t_13.  If we are looking for the 40th term,
      3        n=40 and t_n=t_40.  Do you understand this now?


      4     ca yes
      5     fn editls     //all
      6     br b22
      7     un This is pretty basic.  I think we'd better take another look at the text, and then hit some
      8        more of the problems before pushing ahead.


      9     ad -c2//c2
     10     br b5
b22
      1     qu t or f.  46, 48, 50, 32, 34, 36 is an AP.


      2     ca f
      3     fn editls     //all
      4     ty Correct.  The common difference must apply to all terms in an AP.  Here it does not.


      5     un Wrong.  This is not an AP because d does not apply to all terms.  In an AP, the common
      6        difference must truly be common to all terms.


      7     ad -1//c2
      8     br b23
b23
      1     qu The number 9 in X_9 is called a ________.

      2     ca subscript
      3     fn editls     //all
      4     ty Roger.  Press onward regardless.


      5     br b25
      6     un Negats, Charlie.  9 is a subscript, and denotes the order of arrangement of the terms.
      7        X_9 would be the 9th term in its sequence.


      8     ad -1//c2
      9     br b24
b24
      1     qu In the sequence X_1, X_2, X_3, X_4, ........ ,X_n, ..., X_n is the _______ numbered term.


      2     ca nth
      3     cb n
      4     fn editls     //all
      5     br b25
      6     un No, it is the nth term as denoted by the subscript n.  This is the same concept as the previous
      7        question where X_9 meant that that was the 9th term.
```

```
         8       ad -1//c2
         9       br b24a
b24a
         1       rd I must admit that I'm a bit concerned that these review questions are bothering you.  Let's
         2          take a look at a couple of more concepts, and then we'll go back and look at the problem areas.
         3          Punch me when you're ready to get underway.

         4       br b25
b25
         1       qu A set of numbers in some definite order is called a ________.

         2       ca sequence
         3       cb sequence of numbers
         4       cb progression
         5       cb progression of numbers
         6       fn editls    //all
         7       ty Tremendous memory.  BZ!

         8       br b26
         9       cb set
        10       cb set of numbers
        11       fn editls    //all
        12       ty True, but that doesn't make a very good sentence.  You were supposed to say sequence or
        13          progression (of numbers).

        14       br b26
        15       un Wow! You shouldn't have missed that one!  Maybe you should get out of the numbers game, and take
        16          up poker. --- The answer here is sequence or progression.  Remember those words???

        17       ad -1//c2
        18       br b26
b26
         1       qu In the AP x, x+y, x+2y, x+3y, t3= ________ and d= _______. (Put a comma between your answers.)

         2       ca x+2y,y
         3       cb x+2y,+y
         4       fn editls  · //all
         5       ty Roger.  Very good.

         6       br b26a      //c2//2
         7       br b27
         8       un That's not right.  t3, the 3rd term, is x+2y, and d=y.

         9       ad -1//c2
        10       br b26a      //c2//2
        11       br b27
b26a
         1       rd Charlie, you have missed at least 2 of these 7 review questions. .You've done pretty well on
         2          the tn bit, but I'm afraid you're forgetting some of the basic building blocks.
         3          I think you'd better go back and review the introductory/definition section of the text, and
         4          then we'll run through these 7 questions again.

         5       br b21
b27
```

rd Congratulations, Charlie, you've just reached another milestone on the rocky road to admiral. This is the end of the section on finding term values of AP's.

If you feel comfortable in this area, type sign off, and return to the text to study the formula for finding the sum of a number of terms of an AP.

However, if you have any misgivings about one of the areas noted below, type go to, and then the label listed next to that problem area.

Problem Area	Label
Set	a1
Sequence/Progression	a3
Term	a6
Subscript	a20
AP/Common difference	b1 or b6
Number/Value of terms	b5
t_n formula	b8
t_n problems	b8 or b16
Introductory review	b21

If you do go back and review, then upon completion of the review, type go to b22. This will bring you back to this point, and we may continue from here.

```
ad -c3//c3
ad -c4//c4
ns2
```

```
c0
    1        rd                  Section C    S_n OF ARITHMETIC PROGRESSIONS

c1
    1        qu The sum of an Arithmetic Progression is equal to the number of terms
    2           being added times the sum of the first and last term being added
    3           divided by 2. True or False?
    4        ca true
    5        cb t
    6        fn editls     //all
    7        fn editla     //all
    8        ty Correct
    9        br c2
   10        un Incorrect
   11        br c1a
c1a
    1        rd Read pages 8 and 9 of your handout. Understand the meaning of each
    2           symbol in the formula. Push eob after reading the material.
c2
    1        qu In the formula for summing the first ten terms of a twenty
    2           term A.P. the  n  refers to 10, the number of terms being
    3           added. True or False?
    4        ca true
    5        cb t
    6        fn editls     //all
    7        fn editla     //all
    8        ty Correct
    9        br c3
   10        un Incorrect
   11        br c2a
c2a
    1        rd Read pages 8 and 9 of your handout. Concentrate on the meaning of  n
    2           in the SUM formula. Push eob key after reading the material
    3        ad -1//c3
c3
    1        qu In the formula for the Sum of an A.P. the last term (t_n) refers
    2           to the last term being added. True or False?
    3        ca true
    4        cb t
    5        fn editls     //all
    6        fn editla     //all
    7        ty Correct, but remember in this case it also happens to
    8           be the last term of the A.P.
    9        un No. It is the last term being added,however, in this case
   10           it is also the last term of the A.P. because we will add
   11           all terms in the A.P.
   12        ad -1//c3
   13        br c4
c4
    1        qu The sum of the A.P. 5,10,15,20,25,30,35,40,45,50 is ____.
    2           ( Use the sum formula )
    3        ca 275
    4        fn editls     //all
    5        fn editla     //all
    6        ty Very Good. Try this one.
    7        un Wrong.  n=10 , t_1=5, t_n=50  . Try again.
    8        un Wrong. The answer is 275.
    9        ad -1//c3
   10        br c5          //c3//+3
   11        br c6          //c3//+3
   12        ad -1//c3
c5
    1        qu The sum of the A.P. 12,24,36,48,60,72,84,96,108,120 is ______.
    2           ( Use the sum formula )
    3        ca 660
```

```
   9        fn limitlc   //-2.5//2.6
  10        ty Correct. Excellent.

  11        br c10
  12        un Wrong. The tenth term is -1. Try again.

  13        un Wrong. The answer is - 5/2 .

  14        br c9c
c9c
   1        qu The sum of the  first ten terms of the A.P.  .3, .7, 1.1,  . . .  is ______.

   2        ca 21

   3        cb 21.0
   4        fn editls    //all
   5        fn editla    //all
   6        ty Very Good.

   7        br c10
   8        un Wrong. The tenth term (t10) is 3.9 .  Try again.

   9        un Wrong. The answer is 21.0

  10        br c10
c9d
   1        qu The sum of the first ten terms of the A.P. 1/3, 1/2, 2/3, . . . .  is ______.

   2        ca 1 5/6
   3        cb 11/6
   4        fn editls    //all
   5        fn editla    //all
   6        ty Correct. Very Good.  Let's take a quick review of some  fundamentals we

   7           should have mastered by now.

   8        wa 1.83
   9        fn limitlc   //1.8//1.9
  10        ty Correct. Very Good. Let's  take a quick review of some fundamentals we should

  11           have mastered by now.

  12        un Wrong. The common difference (d) is + 1/6  . Try again.

  13        un Wrong. The answer is 1 5/6 .

  14        br c9a
c10
   1        qu The common difference (d) in the A.P. 8,16,24,32  is ____.

   2        ca 8
   3        fn editls    //all
   4        fn editla    //all
   5        ty Correct.

   6        wa +8

   7        fn editls    //all
   8        fn editla    //all
   9        ty Come on now. You know you don't have to put in plus signs.

  10           Remember, however, always put in minus signs when you have one in your answer.

  11        un Wrong. Try Again.

  12        un Wrong. You must be joking. If you are I'll have the last laugh.

  13        ad -1//c5
  14        br c11
c11
   1        qu The tenth term (t10) in the A.P. 5,8,11,14, . . . . is  _______.

   2        ca 32
   3        fn editls    //all
   4        fn editla    //all
   5        ty Correct.

   6        un Wrong.  d = 3. Try again.

   7        un Wrong. The answer is 32.

   8        ad -1//c5
   9        br b6         //c5//+2
c12
   1        qu The common difference in the A.P. 30,26,22, . . . is ______.

   2        ca -4
   3        fn editls    //all
   4        fn editla    //all
   5        ty Correct. We will now work up to a new area in the summation of A.P. terms.

   6        wa 4
   7        fn editls    //all
   8        fn editla    //all
   9        ty The minus sign is important. Don't leave it OUT.
```

```
    10        un Wrong. The answer is  -4.

    11        ad -1//c5
    12        br b6          //c5//+2
c13
     1        qu The sum of the twenty term A.P.  6,17,28, . . . is ______.

     2        ca 2210
     3        fn editls    //all
     4        fn editla    //all
     5        ty Correct.

     6        un Wrong. d = 11,  n = 20.  Try again.

     7        un Wrong. The answer is 2210

     8        br c14
c14
     1        qu The sum of the ten term A.P. 35,42,49, . . .  ______is.

     2        ca 665
     3        fn editls    //all
     4        fn editla    //all
     5        ty Very Good.

     6        un Wrong. d=7, n= 10. Try again. (HINT-- First solve for the tenth term.)

     7        un Wrong. The last term (t_n) we are adding is 98.  (  In this case

     8           t_n is the tenth term t_10  .)  Try again.

     9        un Wrong. The answer is 665

    10        br c15
c15
     1        rd Let's look at something new.

     2           The sum of the first three terms of the A.P. 2,8,14, . . . . is 24.

     3           The sum of the first five terms of the same A.P. is 70. If we

     4           subtract the sum of the first three terms from the sum of the

     5           first five terms we will have found the sum of the fourth (t_4)

     6           thru fifth (t_5) terms in the A.P. ( In this case the answer would be 46.)

     7           NOTE that in solving for the sum of the 4th thru 5th term of the A.P. we

     8           actually subtracted the sum of the 1st three terms from the sum of

     9           the first five terms.  Now let's try some problems.  Push eoh.

    10        qu The sum of the eleventh  thru fifteenth term of the A.P. 2,4,6,. . . is ________.

    11           (Hint. Remember now ,  we are interested in solving for the 11th thru 15th

    12           so we will solve for the sum of the 1st 10 terms instead of the first eleven.)

    13        ca 130
    14        fn editls    //all
    15        fn editla    //all
    16        ty Excellent.

    17        ad -c6//c6
    18        br c17
    19        un Wrong.

    20        br c17a       //c6//+2
    21        br c16
c16
     1        rd To find the sum of the eleventh term (t_11) thru the fifteenth (t_15)

     2           term in the A.P. 2, 4, 6, . . .  first find the sum of the

     3           first fifteen terms, then the sum of the first ten terms.


     4            Subtract the sum of the first ten terms (s_10) from the sum of

     5           the first fifteen terms ( , ).  This is the sum of the eleventh

     6           thru fifteenth term of the A.P.         Push eoh to continue.
```

```
 7      qu The sum of the eleventh thru fifteenth terms of the A.P. 2,4,6, . . . . is ____.

 8      ca 130
 9      fn editls    //all
10      fn editla    //all
11      ty Very Good.

12      un Wrong. Hint - - The tenth term (t10) is 20 and the fifteenth term

13         (t15) is 30. Try Again.

14      un Wrong. The sum of the first ten terms (s10) is 110. Try again.

15      un Wrong. The sum of the first fifteen terms (t15) is240. Try again.

16      un Wrong. The answer is 130. You know, 240 - 110.

17      ad -1//c6
18      br c17
c17
 1      qu The sum of the ninth term (t9) thru twelfth term (t12) in the

 2         A.P.  5, 10, 15, . . .   is _______.

 3      ca 210
 4      fn editls    //all
 5      fn editla    //all
 6      ty Excellent.

 7      br c18
 8      un The eighth term is 40 and the twelfth term is 60. Try again.

 9      un Wrong. The sum of the first twelve terms (S12) is 390.  Try again.

10      un Wrong. The sum of the first eight terms (s8) is 180.

11      ad -1//c6
12      br c15       //c6//+2
13      br c18

c17a
 1     rd Sign off.  Read pages 8 and 9 of your handout.  Sign on and press FOB after

 2        reading the material.



 3     br c13
c18
 1     qu The sum of a ten term A.P. with the first term (t1) equal to

 2        4  and a common difference (d) of  4 is _____.

 3        (Hint.  Solve for the last term first.)

 4     ca 220
 5     fn editls    //all
 6     fn editla    //all
 7     ty Very Good.

 8     un Wrong. The last term is the tenth term (t10) which is 40.

 9        Try Again.  Solve for s10  .

10     un Wrong. The answer is 220.  We first found the last term tn using

11        the formula  tn = t1 +(n-1)d

12              where  d=4

13                     n=10

14                     t1=4


15            tn= t10= 4 +(10-1)4

16                  = 4 + 36 =  40

17        We then found the sum of the first ten terms (s10) using the formula.

18                 n(t1 + tn)
              sn=-----------
                      2


19          where t1= 4
```

20 $t_{10} = 40$

21 $n=10$

22 $s_n = s_{10} = \frac{10(4 + 40)}{2}$

23 $= 220$

24 Note in the sum formula that the last term being added (t_n) is the

25 tenth term (t_{10}) in this problem.

26 br c19

c19

1 qu The sum of a ten term A.P. with a first term of 3 and a common difference

2 of 2 is _____.

3 ca 120
4 fn editls //all
5 ty Excellent. Read this next one carefully.

6 br c21
7 un Wrong. The last term (t_n) is 21. Try again.

8 un Wrong. Come on now. How did you ever get this far? All we've done

9 in this problem was to find the tenth term (t_{10}) (in this case the

10 last term of the A.P.) and then sum the ten terms of the A.P.

11 Memorize these : 1) $t_n = t_1(n-1)d$

12 any term = 1st term +(term number -1) common diff.

13 2) $s_n = \frac{n(t_1 + t_n)}{2}$

14 sum= no. terms added (1st term + last term added)/ 2

15 Try again.

16 un Wrong. The answer is 120. Sign off. Read page of your handout. Press eob

17 key when you have finished reading the material.

18 br c20

c20

1 qu The sum of a five term A.P. with a first term of 5 and a common

2 difference of -1/2 is _____.

3 ca 20
4 fn editls //all
5 fn editla //all
6 ty Very Good. Read this next one very carefully.

7 un Wrong. Check your signs and try again.

8 un Wrong. The fifth term (in this case the last term) is 3.

9 Try again.

10 un Wrong. The answer is 20. Sign off and come back tomorrow.

11 br c1

c21

1 qu Given the sum of a ten term A.P. as 145 and the first term

2 equal to 1, the sum of the first five terms is _______.

3 ca 35
4 fn editls //all
5 fn editla //all
6 ty Excellent. That was a hard one.

7 un Wrong. Hint- First solve for the tenth term using the SUM formula.

8 Try again.

9 un Wrong. The tenth term (t_{10}) is 28. Now solve for d using the

10 TERM formula and Try Again.

11 un No. d=3. Solve for the fifth term (t_5) using the TERM formula

```
     12          and Try Again.

     13     un No. Using n=5, d=3 in the term formula, the fifth term is 13.

     14        Now, using the sum formula we have :

     15                      s5= 5(1 + 13)
                                 ---------
                                     2

     16        which gives us the answer  35.

     17     ad -c3//c3
     18     ad -c4//c4
     19     ad -c5//c5
     20     ad -c6//c6
     21     br c22
  c22
      1     rd You have  now finished the arithmetic progression section. Stop work on

      2        the machine and go back to the handout.  You should be on page 10.

      3        Please Sign Off.
  ns3
```

```
d0
   1        rd                       Section D   tn OF GEOMETRIC PROGRESSIONS


d1
   1        qu Is a geometric progression a sequence?

   2        ca yes
   3        fn editls    //all
   4        ty Right you are.  The words progression and sequence are synonomous.  Mathematicians define

   5           a sequence (or progression) as a set of numbers arranged in some definite order, so that

   6           each number of the sequence may be obtained from one or more of the preceding numbers by

   7           some fixed law.  Remember when you studied AP's, the fixed law told you to use the common

   8           difference to find the next term.  In a geometric progression, each term after the first

   9           can be found by multiplying it by a fixed quantity called the common ratio.


  10        ad -1//c4
  11        br d9
  12        wa no
  13        fn editls    //all
  14        ty Yes it is.  The words are synonomous.  A progression or sequence is a set of numbers in some

  15           definite order.  A GP has order because each term may be obtained from the preceding by

  16           multiplying by the common ratio.


  17        br d2
  18        un Don't give me any static.  Just answer yes or no.


d2
   1        qu A geometric progression is a set of numbers arranged in some definite order. (t or f)

   2        ca t
   3        cb true
   4        fn editls    //all
   5        ty Correct.  A geometric progression (GP) is a set because each of its terms are separate,

   6           distinct numbers.  The terms of a GP are arranged in some definite order by definition.

   7           Each term is obtained from the preceding term by multiplying it by a common ratio (r).


   8        wa f
   9        wb false
  10        fn editls    //all
  11        ty I should make you go back and reread the handout.  All progressions (sequences) are sets

  12           of numbers arranged in some definite order.


  13        br d3
  14        un Just punch the t or f.  Don't get fancy!

d3
   1        qu In the following GP, what is the value of the common ratio (r)?

   2                             2, 6, 18, 54


   3        ca 3
   4        fn editls    //all
   5        ty Correct.  6/2 = 18/6 = 54/18 = 3 = r


   6        br d6
   7        wa 1/3
   8        fn editls    //all
   9        ty You have found the reciprocal of r.  Try again.

  10        un No.  The value of the common ratio, r=3.  It is found by dividing each term of the progression

  11           into the term that follows.

  12                                6 divided by 2 = 3

  13                                8 divided by 6 = 3

  14                               54 divided by 18= 3


  15        br d4
```

```
d4
    1       qu What is the fifth term of the following GP?

    2                   1, 2, 4, 8, ?


    3       ca 2
    4       fn editis    //all
    5       ty Correct.  The fifth term is 16 and the common ratio is 2.


    6       br d6
    7       wa 16
    8       fn editis    //all
    9       ty Correct.  Now, what is the value of the common ratio, r?  You had to find this value in order

   10          to calculate the fifth term (t5=16).

   11       un No.  You should have been able to determine that t5=16, and r=2.

   12                     2/1 = 4/1 = 8/4 = 16/8 = 2, the common ratio.


   13       br d5
d5
    1       qu What is the fifth term of the following GP?

    2                        16, 8, 4, 2, ?


    3       ca 1/2
    4       fn editis    //all
    5       ty Correct.  t5=1, r=1/2


    6       br d6
    7       wa 1
    8       fn editis    //all
    9       ty Correct.  Much better.  Now, what is the value of r, the common ratio?

   10       un No.  t5=1, r=1/2


   11       br d5a
d5a
    1       rd Sorry, Pal.  I'm afraid I'm going to have to cut you off for awhile.  Reread the handout

    2          section on finding tn of a GP.  When you are ready to proceed again, press the EOB buttons.


    3       br d1
d6
    1       qu What is the value of r in the following GP?

    2                     1, 2, 4, 8, 16


    3       ca 2
    4       fn editis    //all
    5       ty Correct.  Just checking.


    6       br d7
    7       un No.  r=2


    8       br d6a
d6a
    1       rd You apparently don't quite have the idea yet.  Reread the handout section on finding tn

    2          of a GP.  When you have studied the material thoroughly, press the EOB button and we will

    3          press onward.


    4       br d1
d7
    1       qu What is the value of r in the following GP?

    2                   9, 3, 1, 1/3


    3       ca 1/3
    4       fn editis    //all
    5       cb .33
    6       fn limitic   //.30//.34
    7       ty Crazy!  3/9 = 1/3 = r


    8       br d10
    9       wa 3
```

```
      10        fn editls     //all
      11        ty You found the reciprocal.  Try again.

      12        un No.  All you have to do is divide the first term into the second term, or the second term

      13           into the third term, etc. (3 ) = 1/3 = r)


      14           Here is another similar type problem.  Let's give this one all you've got.


      15        br d8
  d8
       1        qu What is the value of the common ratio in the following GP?

       2                           8, 4, 2, 1


       3        ca 1/2
       4        cb .5
       5        fn editls     //all
       6        ty Much better.  4/8 = 2/4 = 1/2 = r.


       7        br d10
       8        un NO!


       9        br d8a
 d8a
       1        rd Have you ever seen a computer with an epileptic fit?  The correct answer was r=4/8=2/4=1/2.

       2           Let's take a break.  You read the section on geometric progressions again while I unwind.

       3           When you are ready to press onward, punch me in the EOB.


       4        br d1
  d9
       1        qu In the following GP, what is the value of r (the common ratio)?

       2                               16, 24, 36, 54


       3        ca 3/2
       4        cb 1 1/2
       5        cb 1 5
       6        fn editls     //all
       7        ty Correct.  24/16 = 36/24 = 54/36 = 3/2 = r.


       8        ad -1//c4
       9        un No, remember the common ratio is found by dividing any term in the progression into the term

      10           that follows.  In this case, r=3/2.

      11                          24 divided by 16 = 3/2

      12                       or 36 divided by 24 = 3/2

      13                       or 54 divided by 36 = 3/2


      14        br d3
 d10
       1        qu In the following GP, what is the value of r?

       2                        2, -1/2, 1/8, -1/32


       3        ca -1/4
       4        cb -.25
       5        fn editls     //all
       6        ad -1//c4
       7        ty Correct.  Have a banana.  You are doing so well!


       8        br d14         //c4//3
       9        wa 1/4
      10        wb .25
      11        ty No, the answer is -1/4.  Watch your signs!


      12        br d11
      13        un No.  In a GP each term after the first may be found by multiplying the preceding term by the

      14           common ratio.  In this problem the common ratio was r=-1/4.

      15                          (   2) x (-1/4) = - 1/2
```

```
                    (-1/2) x (-1/4) =   1/8

                    ( 1/8) x (-1/4) = -1/32


        br d11
d11
        qu What is the common ratio between any two terms in the following GP?

                         24, -12, 6, -3, 3/2


        ca -1/2
        cb -.5
        cb -0.5
        fn editis    //all
        ty By George, I think she's got it!


        br d13
        un The correct answer was r=(-1/2)= -12/24, -6/12, -3/6.  I'll give you one more chance before
           I zap you with about 220 volts.

        br d12
d12
        qu In the following GP, find the value of the common ratio (r).  (Hint...Watch your signs.)

                         1, -3, 9, -27


        ca -3
        fn editis    //all
        ty Rog!  r=3.  You are now batting .333.


        br d13
        un I give up.  r = -3 = -3/1 = -9/3 = -27/9.


        br d12a
d12a
        rd I can't make it any plainer.  Try rereading the handout section on geometric progressions,
           and we'll start over from the beginning.  When you are ready to continue, press the EOB
           button.


        br d1
d13
        qu In the following geometric progression, what are the values of ---

                   (t_1) the first term = ?

                   (t_n) the last term = ?

                   (n ) the number of terms = ?

                   3/4, 7/8, 49/48, 343/288

           (Put commas between your answers.)

        ca 3/4, 343/288, 4
        cb 3/4,343/288,4
        fn editis    //all
        ty Correct.  By the way, the value of r in this GP was 7/6.


        un I'm sorry.  I wasn't paying any attention.  Did you say????

                        t_1 = 3/4

                        t_n = 343/288

                        n  = 4          ??????

           This was just a brief review of terminology before proceeding on to find the nth term of a
           GP.  I think the common ratio of this GP was 7/6.


        br d14
d14
        rd As you remember from your reading, the value of the nth term of a geometric progression
           is found by using the formula --
```

```
                              $t_n = t_1r^{n-1}$

   I'd like to give you a few problems on finding $t_n$.  Are you ready?  If so, press the FOB.

br d20       //c4//5
d15
qu Using the formula for finding $t_n$ of a GP, find the value of the 4th term of a GP in which
   $t_1$=9 and r=2.

ca 72
fn editls    //all
ty Correct.  The progression was 9 + 18 + 36 + 72.

br d20
un You shouldn't have missed that one.  If you had used the formula --

                              $t_n = t_1r^{n-1}$

                                  $= 9x2^3$

                                  $= 9x8$

                                  $= 72$

   The correct answer was $t_n$=72.  Let's try another one.

br d16
d16
qu Find the fifth term of a geometric progression whose common ratio is 2 and first term is 9.

ca 144
fn editls    //all
ty Much better.  This is the same progression as you had in the question only this time you are
   looking for the fifth term instead of the fourth.

br d20
un No.  The correct answer to this problem was $t_5$=144.

   Using the formula $t_n = t_1r^{n-1}$ you should have gotten --

                    $t_5 = 9x2^{5-1}$

                        $= 9x2^4$

                        $= 9x16$

                        $= 144$

   This progression was 9, 18, 36, 72, 144.  As you can see this is the same progression you
   had the last time only in this case you were looking for the fifth term instead of the fourth.

br d17
d17
qu If $t_1$=9 and r=2, find the value of $t_5$ if the subsequent terms are in geometric progression.

ca 144
fn editls    //all
ty Correct.  Same question.  Just wanted to see if you were paying attention.

un For some reason you and I aren't communicating too well.  This is the exact same question
   I just gave you.

                                  $t_5 = t_1r^{n-1}$

                                      $= 9x2^{5-1}$

                                      $= 9x2^4$

                                      $= 144$

   I'm going to send you back five giant steps for review.  Good luck!

br d13
```

d18
1 qu If t_1=5 [illegible], find the first term of the [illegible].

2 ca 5
3 fn editls //all
4 ty Just checking.

5 un Read the question! t_1 = the first term.

6 un No, no. t_1=5. Come on now.

7 br d19
d19
1 qu Given that t_1=3 and r=3, find the value of the third term if the progression is a GP.

2 ca 27
3 fn editls //all
4 ty Correct. $t_3 = t_1r^{n-1}$

5 $= 3x3^{3-1}$

6 = 27

7 br d16
8 wa 9
9 fn editls //all
10 ty That's the second term. Try again.

11 un No. $t_3 = t_1r^{n-1}$

12 $= 3x3^{3-1}$

13 $= 3x3^2$

14 = 27

15 br d16
d20
1 qu Find the fifth term of a GP in which t_1=64 and r=1/2.

2 ca 4
3 fn editls //all
4 ad -1//c4
5 ty Correct. $t_5 = t_1r^{n-1}$

6 $= 64 \times (1/2)^4$

7 = 64 x (1/16)

8 = 4

9 The first five terms of this progression were 64, 32, 16, 8, 4.

10 br d26 //c4//4
11 br d23
12 un Apparently you are not a USNA ''formula plugger''.

13 $t_n = t_1r^{n-1}$

14 $t_5 = 64 \times (1/2)^{5-1}$

15 $= 64 \times (1/2)^4$

16 = 64 x (1/16)

17 = 4

18 The progression was 64, 32, 16, 8, 4. I'll give you some more similar problems.

19 br d21
d21
1 qu Find the fourth term of the GP in which t_1=32 and r=1/2. (Hint..You should know from this

2 that n=4. Plug the formula.)

3 ca 4
4 fn editls //all

```
      ty Right!               t_4 = 32 x (1/2)^3 = 4

      un I'm going to send you back for some review.  You should [illegible].....
                             t_4 = 32 x (1/2)^3

                                 = 32 x 1/8

                                 = 4

      br d16
d22
      qu What is the fifth term of the geometric progression in which r=1/5 and t_1=625.

      ca 1
      fn editls    //all
      ty Good.             t_5 = 625 x (1/5)^4 = 625 x 1/625 = 1

      br d23
      wa 5
      wb 1/5
      fn editls    //all
      ty No, but you are close (Hint...(1/5)^4=1/625).  Try again.

      un Wrong.            t_5 = 625 x (1/5)^4

                             = 625 x 1/625

                             = 1

      br d16
d23
      qu In a GP, given that t_4=81, t_1=3, find the value of r.

      ca 3
      fn editls    //all
      ty Bravo Zulu!             t_4 = t_1 r^(n-1)

                                 81 = 3r^3

                                 27 = r^3

                                  81 = 3r^3

                                  27 = r^3

      br d26
      wa 9
      fn editls    //all
      ty Close.  Try again.

      un In order to find the correct answer, you again use the formula...

                           t_4 = t_1 r^(n-1)   (n=4)

                           81 = 3r^(4-1)

                           27 = r^3

                            3 = r

            The GP was 3, 9, 27, 81.  Here's an easier one.

      br d24
d24
      qu Given a geometric progression with t_4=16 and t_1=2, find the value of r, the common ratio.

      ca 2
      fn editls    //all
      ty Right.               16 = 2r^3

                               8 = r^3

                               2 = r

                  The progression is 16, 8, 4, 2.
```

8 wa 1/2

9 fn editls //all

10 ty No. I think you switched t_4 and t_1. Try again.

11 un No. Hint.... $t_4 = t_1 r^{4-1}$

12 $16 = 2r^3$

13 $2 = r$ Try again.

14 un NO! r=2.

15 br d25

d25

1 qu The value of the third term of a GP is 64. The value of the first term is 4.

2 What is the value of r, the common ratio?

3 ca 4

4 cb +4

5 cb -4

6 fn editls //all

7 ty Righto. $64 = 4r^2$

8 (+ or -) 4 = r

9 There were two possible GP's.....

10 4, 16, 64

11 or

12 4, -16, 64

13 wa 2

14 wb 8

15 fn editls //all

16 ty No. Try again. You want the square root of 16.

17 un No. $t_3 = t_1 r^{n-1}$

18 $64 = 4r^3$ Try again.

19 un No. r = + or - 4.

20 br d20

d26

1 qu If t_1 of a GP is -27 and t_4=1, what is the value of r?

2 ca -1/3

3 fn editls //all

4 cb .33

5 fn limitic //.30//.34

6 ad -1//c4

7 ty Very good. $1 = -27r^3$

8 $-1/27 = r^3$

9 $-1/3 = r$

10 br d30 //c4//5

11 wa 1/3

12 fn editls //all

13 ty No. Your sign is incorrect. Note that t_1=-27. Try again.

14 un Using the formula... $t_4 = t_1 r^{n-1}$

15 $1 = (-27)r^3$

16 $-1/27 = r^3$

17 $-1/3 = r$

18 br d27

27

1 qu Find the common ratio in a GP in which the fourth term is equal to minus two and the first

2 term is equal to 128.

3 ca -1/4

4 cb -.25

```
      5      cb -0.25
      6      fn editls    //all
      7      ty Good.  The progression was 128, -32, 8, -2.

      8      wa -4
      9      fn editls    //all
     10      ty No.  I think you switched t4 and t1 around.  Try again.

     11      un No.        -2 = 128r^3      Try again.

     12      un Nope.     -1/64 = r^3

     13                   -1/4  = r

     14      br d28
d28
      1      qu The seventh term of a GP is 192 and r=2.  Find the first term.

      2      ca 3
      3      fn editls    //all
      4      ty Correct.  The progression was 3, 6, 12, 24, 96, 192.

      5      br d30
      6      un No.  Try again.  2^6 = 64.

      7      un Wrong.  You should have gotten, using the formula.....

      8                          192    = t1(2^6)

      9                          192/64 = t1

     10                               3 = t1

     11      br d29
d29
      1      qu Given t4= 405 and r=-3, find t1.

      2      ca -15
      3      cb -405/27
      4      fn editls    //all
      5      ty Crazy.                405 = t1 x (-3)^3

      6                               -15 = t1

      7                     The progression was -15, 45, -135, 405.

      8      br d30
      9      un Wrong.              405 = t1 x (-3)^3.  Try again.

     10      un No.  t1 is a negative number.  Try again.

     11      un No.                 t1 = -(405/27) = -15

     12      br d29b
d29b
      1      rd You are either careless in your arithmetic, or you aren't with me.  Take a short break.

      2         Reread the manual and we'll try again.  When you are ready, press the EOB button.

      3      br d9
d30
      1      qu The sixth term of a GP is -(1/512) and r=-(1/4).  Find the value of t1.

      2      ca 2
      3      fn editls    //all
      4      ad -1//c4
      5      ty Good.
      6      br d32
      7      wa -2
      8      ty Check your signs, and try again.

      9      un No.     t1=2            t6 = t1r^(n-1)

     10                         -(1/512)  = t1(-1/1024)

     11                           -1024
                                  -----  = t1
                                  -512
```

$2 = t_1$

br d31

d31

qu The third term of a GP is 3/100 and r=-.1. Find the first term.

ca 3
fn editls //all
ty Much better. The progression was 3, -3/10, 3/100.

wa -3
fn editls //all
ty Check your signs. Try again.

un Nope. $t_1=3$ $t_3 = t_1r^{n-1}$

$3/100 = t_1(-1/10)^2$

$(3/100)(100/1) = t_1$

$3 = t_1$

br d29

d32

rd The next few problems are a little more difficult , but you should be able to handle them.

You will be given the values of t_1, t_n, and r in a geometric progression, and asked to find

the value of n.

For example, given $t_1=-15$, $t_n=405$, and r=3, find the value of n.

To solve for n, just plug the formula...

$t_n = t_1r^{n-1}$

$405 = -15\ (-3)^{n-1}$

$-27 = (-3)^{n-1}$

$(-3)^3 = (-3)^{n-1}$

Therefore, $3 = n-1$

$4 = n$

Okay. You try one. Press the EOB button.

d33

qu Given $t_1=2$, $t_n=-1/32$, and r=-1/4, find the value of n if the terms are in

geometric progression.

ca 4
fn editls //all
ty Marvelous.

br d37
un Nope. $t_n = t_1r^{n-1}$

$(-1/32) = 2 \times (-1/4)^{n-1}$

$(-1/64) = (-1/4)^{n-1}$

$(-1/4)^3 = (-1/4)^{n-1}$

$3 = n-1$

$4 = n$

Let's try one more.

br d34

d34

qu Given $t_1=2$, $t_n=18$, and $r=3$. Find the value of n (the number of terms) in the geometric progression.

ca 3
fn editls //all
ty Very good. $3^2 = 3^{n-1}$

$2 = n-1$

$3 = n$

br d36
un No. Plug the formula. Remember $9 = 3^2$. Try again.

un Nope. $t_n = t_1r^{n-1}$

$18 = 2(3)^{n-1}$

$9 = 3n-1$ Try again.

un You work for the National Teacher's Association?

$9 = 3^{n-1}$

$3^2 = 3^{n-1}$

$2 = n-1$

$3 = n$

The progression was 2, 6, 18.

br d35

d35

qu Find the number of terms in the GP whose first term is two, nth term is sixteen, and common ratio is two.

ca 4
fn editls //all
ty Finally. The progression was 2, 4, 8, 16.

un No. The answer was n=4.

$16 = 2 \times 2^{n-1}$

$8 = 2^{n-1}$

$2^3 = 2^{n-1}$

$3 = n-1$

$4 = n$

What do you say we reread the example and start over.

br d32

d36

qu The first term of a geometric progression is 8 and the common ratio is -3/2. Which term is equal to (-243/4)?

ca 6
fn editls //all
ty Correct.

br d38
un No. $-243/4 = 8 \times (-3/2)^{n-1}$

$-243/32 = (-3/2)^{n-1}$ Try again.

un No. $-243/32 = (-3/2)^{n-1}$

$-(3^5/2^5) = (-3/2)^{n-1}$

$(-3/2)^5 = (-3/2)^{n-1}$

```
  12                            5 = n-1

  13                            6 = n                  Let's start over.


  14        br d32
d37
   1        qu If the nth term of a GP is equal to 729 and the first term is equal to 64, what is the value

   2           of n?  The ratio between each of the terms is 3/2.

   3        ca 7
   4        fn editls     //all
   5        ty Correct.


   6        un No.  This one is fairly difficult.  Let me start you off.

   7                          729 = 64 x (3/2)^(n-1)

   8                        729/64 = (3/2)n-1                    Try again.

   9        un No.          729/64 = (3/2)^(n-1)

  10                        (3/2)^6 = (3/2)^(n-1)

  11                              6 = n-1

  12                              7 = n


  13        br d34
d38
   1        rd We are now going to review what you have hopefully learned.  This is not a test,

   2           so don't sweat it.  The problems are all slightly different from what you've had, so read

   3           them carefully.  Press the EOB button...NOW!


d39
   1        qu The first and second terms of a geometric progression are a and b, respectively.

   2           What is the third term of the progression?

   3        ca b^2/a
   4        fn editls     //all
   5        fn editla     //all
   6        ty Correct.  Very good.


   7        br d44        //c4//6
   8        un No.  Find the value of r, then multiply the second term by this value

   9           to find t_3.  Try again.

  10        un No.                  r  = b/a

  11                              t_3 = t_2 x r

  12                                  = b x b/a

  13                                  = b^2/a


  14        br d40
d40
   1        qu Is the sequence 5, 10, 15, 20, 25, 30 a geometric progression?

   2        ca no
   3        fn editls     //all
   4        ty That's right.  It is an AP with a common difference of 5.


   5        wa yes
   6        fn editls     //all
   7        ty No, it isn't.  It is an AP with a common difference of 5.


   8        un Just answer yes or no.

d41
   1        qu Is the sequence 2, 4, 8, 12, 16 a geometric progression?
```

ca no
fn editls //all
ty Correct. t_4 does not equal t_3 x r.

wa yes
fn editls //all
ty Wrong. In order for a sequence to be a GP, each term after the first must differ from the preceding term by a common ratio. There is not a common ratio in this progression.

br d42

d42

qu Is the sequence $1/(2)$, $1/(2)^2$, $1/(2)^3$, $1/(2)^4$, a GP?

ca yes
fn editls //all
ty Correct. Good work, Harriet. r = 1/2.

wa no
ty What do you mean no? It sure is! r = 1/2.

br d43

d43

qu How about the progression $1/b$, $-a/b$, a^2/b, $-a^3/b$? Is it a GP?

ca yes
fn editls //all
ty Correct.

wa no
fn editls //all
ty Close. Try again. r = -a.

un Yes or no, please.

d44

qu Is the following progression a GP?

$\frac{a^2}{b^2 + 2a}$, $\frac{-1}{a}$,

$\frac{b^2 + 2a}{a^4}$, $\frac{-(b^2 + 2a)^2}{a^7}$,

ca yes
fn editls //all
ty Excellent. The value of r was $-(b^2 + 2a)/a^3$.

wa no
fn editls //all
ty Yes, it was! r was equal to $-(b^2 + 2a)/a^3$.

un Yes

br d45

d45

rd Suppose I deposited 100 dollars in a savings account at 4 percent interest compounded annually.
At the end of the first year, I would have accumulated 104 dollars.
At the end of the second year, my total savings would be 104 + 104(0.4) = 108.16, and so on.
Notice that a geometric progression is being formed.

PERIOD	0	1	2	3	4
	100	100(1+.04)	$100(1+.04)^2$	$100(1+.04)^3$	$100(1+.04)^4$
	P	P(1+I)	$P(1+I)^2$	$P(1+I)^3$	$P(1+I)^4$

Any term in this progression may be found by the formula....

$$A = P(1+I)^n$$

12 A = amount due at the end of n periods

13 P = amount initially invested (called present value in accounting)

14 i = interest rate

15 You can see that this is quite similar to our formula for finding t_n of a GP....

16 t_n = A

17 r = 1+i

18 A = t_1

19 $t_n = t_1 r^{n-1}$ $A = P(1+i)^n$

20 Note it is not exactly the same
21 because interest is paid at the end of the year.

22 (If it doesn't make sense, just memorize the formula $A = P(1+i)^n$).

23 Press the EOB buttons, and we will continue.

d46
1 qu Now.....You try one. Suppose you were to invest 100 dollars in a savings bank at 3 percent
2 interest compounded annually. How much money would you have at the end of 2 years?
3 (Hint...Use the formula $A = P(1+i)^n$).

4 ca 106.09
5 fn editls //all
6 ty Very good. You'll see more of this formula next term in ''Accounting''. heh, heh...

7 un No. The correct answer was 106.09 dollars.

8 $A = 100(1+.03)^2$

9 = 106.09

10 Don't worry about it. You will see this many times again before you are through here.

11 br d47
d47
1 qu A chain letter is started, and each person who receives a letter writes one to five
2 friends at the end of one week. If the originator sends out five letters, how many
3 letters of the chain would have to be carried by the mails at the end of six weeks?

4 ca 15625
5 cb 15,625
6 cb 5^6
7 cb 5^5
8 fn editls //all
9 ty Very good.

10 un No. 5^5 = 3,125. Try again.

11 un No. $t_n = t_1 r^{n-1}$

12 $= 5 \times 5^5$

13 = 15,625

14 br d48
d48
1 qu Is the following sequence a GP?

2 1/2, 1/3, 1/4, 1/5

3 ca no
4 fn editls //all
5 ty Correct. There is no common ratio.

6 wa yes
7 fn editis //all
8 ty No. It isn't. There is no common ratio.

d49
1 qu Is it an AP?

2 ca no
3 fn editis //all
4 ty Correct. It is neither an AP nor a GP. It is what is known as a harmonic progression
5 in which each term is found from the preceding by the addition of a common difference
6 to the reciprocals of the terms. This is actually extraneous knowledge.....and I'm sure
7 you can safely forget it.

8 wa yes
9 fn editis //all
10 ty No, this is neither an AP nor a GP. It has no common difference and no common ratio.

d50
1 rd If you were given the values of the second term (t_2) and the fifth term (t_5) of a GP,
2 could you find the fourth term (t_4)? Although you do not know the values of t_1 and r,
3 these values can be found by solving simultaneous equations. Once you have t_1 and r,
4 finding t_4 (or any other term in the progression) is relatively simple.

5 For example...Given $t_2=3$ and $t_5=81/8$ in a GP, find the value of t_4.

6 From the information given you know that...

7 (1) $3 = t_1r^{(2-1)}$

8 and

9 (2) $81/8 = t_1r^{(5-1)}$

10 Equation (1) can be written.... $(3/r) = t_1$

11 Substituting for t_1 in equation (2).... $(81/8) = (3/r)r4$

12 $81/24 = r^3$

13 $27/8 = r^3$

14 $3/2 = r$

15 If $r=3/2$, then $t_1=2$ and t_4 can easily be found...

16 $t_4 = t_1r^{n-1}$

17 $= 2 \times (3/2)^3$

18 $= 27/4$

19 OK. Your turn. When you are ready, press the EOB button.

d51
1 qu Given (in a GP) $t_2=5$, and $t_5=-625$. Find t_4.

2 ca 125
3 fn editis //all
4 ty Correct. $t_1=-1$, $r=-5$, and $t_4=125$

5 wa -125
6 fn editis //all
7 ty Check your signs, and try again.

8 un Wrong. Try again.

9 un No. (1) $5 = t_1r^1$ $(5/r = t_1)$

```
                          (2)    -625 = t1r^4

            Substituting for t1 in (2)...

                                 -625 = (5/r) x r^4

                                 -125 = r^3

                                   -5 = r

            and from (1).......... t1 = (5/-5) = -1

                                   t4 = t1r^(n-1)

                                      = (-1) x (-5)^3

                                      = (-1) x (-125)

                                      = 125

     br d52
d52
     qu If t5 of a GP equals 4/3 and t2=36, find the value of t3.

     ca 12
     fn editls    //all
     ty Very good.  The progression was 108, 36, 12, 4, 4/3.

     un Wrong.  Try again.

     un Wrong again.  (Hint...r=1/3)

     un No.  I'll give you one more chance.  If you get this answer correct, you are through the
        section of finding tn of a GP.
               Remember          (1)  t5 = 4/3 = t1r^4

                                 (2)  t2 = 36  = t1r

        Good luck, Charlie.  Find t3.

     un No.  t3=12.

     br d40
d53
     rd Congratulations!  You are now a semi-expert on geometric progressions.  If you wish
        further instruction in a particular area, included below is a list of review segments.
        Type go to and then the label listed beside the problem area.

               Problem Area                       Label

               Finding tn                          d14

               Finding r (the common ratio)        d23

               Finding t1                          d28

               Finding n                           d32

               Word problems                       d38

        When you feel you've had enough review, type go to d53 and you will be sent back to here.

        If you feel you have had enough review and are ready to continue, take a break and reread
        the handout section on finding Sn of a GP.  When you have finished your reading and are
        ready for more problems, press the EOB buttons, and we'll have at it.
```

```
e[illegible]
    1       r' [illegible]

e1
    1       qu Find the sum of the first three terms of the geometric progression 1, 5, 25, . . .

    2       ca 31

    3       fn editls     //all
    4       fn editla     //all
    5       ad -1//c6
    6       ty Correct. I don't know how you got your answer, but note that you could have just

    7          added 1+5+25=31 or used the formula:

    8                     s = t  x (1-r^n)
                           n   1
                              ----------
                                 1-r

    9       . (This is the long way around, but use the formula anyway.  It's good for practice.)



   10       un No.  You want to find the sum of the first three terms.



   11                          s = t + t + t = 1+5+15 = ?       Now try again.
                                3   1   2   3

   12       ad -1//c5
   13       un No.  S  = 1 + 5 + 25 =31 ..... or .....
                     3


   14                      S =  t  x(1-r^n)
                            n    1
                                ----------
                                   1-r

   15




   16       ad -1//c5
   17       br e2
e2
    1       qu Find the sum of the first four terms of the geometric progression 1, 5, 25, . . . .

    2       ca 156
    3       fn editls     //all
    4       fn editla     //all
    5       ty Correct.

    6




    7       ad -1//c6
    8       br e3         //c5//+3
    9       br e6
   10       un No.    S = t  x (1-r^4)
                       4   1
                         --------------
                              1-r


   11                TRY AGAIN.

   12       ad -1//c5
   13       un No. (Hint :    5^4= 625)  TRY AGAIN.

   14       ad -1//c5
   15       un No.     S = 1 x(1-5^4)
                        4
                         ----------
                            1-5

   16                   = 1-625       = 156
                          -----
                           -4

   17



   18       br e3
```

c3

1 qu The sum of the first five terms of the G.P. 1, 2, 4, 8, 16, ... is______.

2 ca 31
3 fn editls //all
4 fn editla //all
5 ty Good work.

6 wa -31
7 fn editls //all
8 fn editla //all
9 ty Your sign is incorrect. Try again.

10 ad -1//c5
11 un No. Using the formula to find s_5 you should have $t_1=1$, $r=2$ and $n=5$.

12 (Actually the easiest way is $S_5= 1+2+4+8+16=$? Try again using the formula.

13 Check your answers by adding the terms.)

14 ad -1//c5
15 un No. $S_5= 31$

16

17 ad -1//c5
18 br e5a

e4

1 qu Find the sum of the first four terms of the G.P. 2, 6, 18, 54, ...

2 ca 80
3 fn editls //all
4 fn editla //all
5 ty Very Good. $S_4= 2\ \dfrac{x(1-3^4)}{1-3}$

6 $= 80$

7

8 br e5a //c5//+5
9 wa -80
10 ty Watch your signs. Try again.

11 ad -1//c5
12 un You can just add the four terms. $S_4= 2+6+18+54 =80$ or

13 use the formula $S_4= \dfrac{t_1\ x(1-r^n)}{1-r}$

14 $= \dfrac{2\ x(1-3^4)}{1-3}$

15 $= \dfrac{2\ x(1-81)}{-2}$

16 $= 80$

17

18 br e5a

e5

1 qu Find the sum of the first four terms of the G.P. 1,3,9, ...

2 ca 40
3 fn editls //all
4 fn editla //all
5 ty Bo-o-tiful.

6

7 ad +3//c5
8 br e6
9 wa -40
10 ty That isn't logical is it? You mean to tell me that 1+3+9+27= -40 ?

11 Type the correct answer.

```
      12     ad -1//c5
      13     un You aren't listening to me carefully. The correct [illegible]:

      14                         S  = 1 x(1-3⁴)
                                  4  ---------
                                       1-3

      15                           = 1 x(1-81)
                                     ---------
                                        -2

      16                           =    40

      17        Rather than send you to mast admiral I'm going to give you a little extra

      18        instruction.

      19


      20     br e5a
 e5a
       1     rd By now you should know that you can find the sum of a number of terms in a geometric

       2        progression by simply adding the terms (if you know them all). You should also know

       3        that the same answer can be obtained by using the formula:

       4                             S  = t  x(1-rⁿ)
                                      n    1
                                         ----------
                                            1-r

       5        For example in the progression 1, 2, 4, 8, 16, 32, . . .

       6                       S  = 1+2+4+8 = 15
                                4

       7                           or

       8                             t  x (1-r⁴)
                                      1
                       S  =   ------------------
                        4            1-r

       9                        = 1 x (1-2⁴)
                                  ----------
                                      1-2

      10                       = 1 x(1-16)
                                 ---------
                                    -1

      11                       = -15
                                 ---
                                  -1

      12                       = 15

      13        You probably also have found, if you have been trying to ''plug'' the formula, that you

      14        have to pay very close attention to signs.  Most of your errors will be because of simple

      15        arithmetic mistakes.  DON'T LET THE TYPEWRITER FORCE YOU INTO WORKING TOO FAST.

      16        If you want to check your answer before typing it in, you can always reconstruct

      17        the progression , and add the terms as a check.

      18        Enough of this jazz.  You'll learn faster if you try the problems yourself.

      19        Press the EOB button, and we'll continue.


      20


      21     ad -c5//c5
      22     ad -c6//c6
 e5b
       1     qu Using the formula for S  of a GP, find the sum of
       2        the first five terms of ⁿthe progression...

       3                      1, 3, 9, 27, 81

       4     ca 121
       5     fn editls    //all
       6     ty Correct.            S  = 1 x (1-3⁵)
                                     5   ----------
                                            1-3
```

$$= \frac{1 \times (1-243)}{-2}$$

$$= 121$$

or, to check...1 + 3 + 9 + 27 + 81 = 121

un No. You should know from looking at the progression that $t_1=1$, $n=5$, and $r=3$. Putting these values into the formula for S_n you have......

$$S_n = \frac{1 \times (1-3^5)}{1-3}$$

$3^5 = 243$. Try again. (You can also check your answer by adding 1 + 3 + 9 + 27 + 81 = S_5.)

un No. $S_5 = \frac{1 \times (1-243)}{1-3}$

$$= \frac{-242}{2}$$

$= 121$ or, to check....1 + 3 + 9 + 27 + 81 = 121

br e5c

e5c

qu Using the formula for S_n, find the sum of the first __five__ terms of the GP in which $t_1=1$, $n=5$, and $r=3$.

ca 121
fn editls //all
ty Well done, Martha. Same problem as the last one.

br e2
un No, Harriet. Try again. $S_5 = \frac{1 \times (1-3^5)}{1-3} = ?$

un Now listen, Isabel. You just finished doing this same problem. Try one more time.

$$S_5 = \frac{1 \times (1-243)}{1-3} = ?$$

un They always told me that education was a painful process, but I have the feeling that this hurts me more than it does you. No, your answer was not right. $S_5=121$.

$$S_5 = 1 + 3 + 9 + 27 + 81 = 121$$

br e5d

e5d

rd Anyway, Hazel, what I'm trying to say is that this ain't ''Home Ec''. Try rereading the handout section on finding S_n of a GP one more time, and we'll start from scratch. When you've done your homework, press the FOR button and we'll have at it.

```
        br e1
e
        rd So far you should have learned that all you have to do to find the sum
           of a number of terms of a GP

           (or an AP for that matter) is to add the terms.  However,
           in most cases you will

           only be given the values of the first term, the common ratio, and the number of terms.

           When ''they'' try that jazz, just plug the formula....

                                    t1(1-r^n)
                              Sn =  ---------
                                      1-r

           The following questions are designed to make a ''formula plugger'' out of you.

           You can use the formula any time you know three of the four values in the

           equation (t1, r, n, Sn).  Remember,
           McNamara needs numbers boys.

           (Hell of an incentive!)  Press the EOB button.



        ad -c5//c5
e7
        qu Using the formula Sn = t1(1-r^n), find the sum of the first four terms of the GP...

                   -1, +5, -25          (Note that r is a negative number.)

        ca 104
        fn editls     //all
        ad -1//c6
        ty Crazy.     S4 =
           (-1)x(1-(-5)^4)
              1-(-5)
           = 104



        br c8          //c5//+1
        br e12         //c6//+3
        un Wrong. Try again.

        ad -1//c5
        un No. (Remember you can check your answer finding t4 and adding the four terms.)

           Try again Charles.

        ad -1//c5
        un Sorry about that Charles.

              S4 =(-1)x(1-(-5)^4)
                   --------------
                      1-(-5)

               = (-1)x(1-625)
                 -----------
                      6

               =    104



        ad -1//c5
        br e8
e8
        qu Find the sum of the first five terms of the G.P. 1, -2, 4, . . . . .

        ca 11
        fn editls     //all
        fn editla     //all
        ty Outstanding. 1-2+4-8+16 = 11

```

```
                 /,-   /-
            [illegible]ain. [illegible]

      -1//c5
            [illegible]

              S  = 1 x(1-(-.) )
                     ----------
                       1-(-2)

                 = 1 x 33
                   ------
                    3

                 =    11

                 check.    = 1+(-2)+4+(-8)+16 =11



      -1//c5
      [illegible]
1     qu Using the formula for Sn find the sum of the first four terms of the G.P.

2        -1, +5, -25, +125, . . . . .

3     ca 104
4     fn editls    //all
5     fn editla    //all
6     ty Correct.

7



8     un Come on now even a home economics major should be able to add -1,+5,-25,+125. But

9        try using the formula anyway (and check by adding the first four terms).

10    un No. s4= 104. RELAX. Think about what you are doing . I'm going to give you

11       a little remedial work.

12



13    br e10a
e10
1     qu Find the sum of the first five terms of the G.P. -3, 6, -12, . . . .

2     ca -33
3     fn editls    //all
4     fn editla    //all
5     ty ROGER. Way to hang in there Charlie.

6



7     br e10a      //c5//c6
8     br e7
9     un No. t1= -3, r= -2, and n=5. Try again.

10    ad -1//c5
11    un No. Hint.-- S5 is a negative number. Check your arithmetic Martha and Try again.

12    ad -1//c5
13    un Nope.

14            S5 =(-3) x(1-(-2)5)
                 ---------------
                      1-(-2)

15              = (-3) x(1-(-32))
                  --------------
                        3

16              =     -3 x 33
                      -------
                         3
```

[illegible]

rd Apparently you don't quite understand how to find S_n of a geometric progression when r is a negative number. Note that when r is a negative every second term in the progression is negative, but the formula still gives the correct answer.

For example : In the progression -1, 2, -4, 8, -16, . . .

$$S_5 = t_1 + t_2 + t_3 + t_4 + t_5$$

$$= (-1) + (2) + (-4) + (8) + (-16)$$

$$= -11$$

or using the formula for S_n

$$S_5 = \frac{t_1 \times (1-r^n)}{1-r}$$

$$= \frac{(-1)\times(1-(-2)^5)}{1-(-2)}$$

$$= \frac{(-1)\ \times(1-(-32))}{3}$$

$$= \frac{(-1)\ \times\ (33)}{3}$$

$$= -11$$

The important thing to remember from all this gibberish is that the formula for S_n will give you the correct answer even if r is negative, a fraction or a decimal. Again, most of your mistakes are because of simple math errors. Be more careful. Press the eob button and you can try some more problems.

ad -c5//c5

ad -c6//c6

e10b

qu Find S_n for the first three terms of the following GP. Use the formula.

-16, 8, -4 (Note that r = -1/2.)

ca -12

fn editls //all

ty Correct. $S_n = \frac{(-16)\times(1-(-1/2)^3}{1-(-1/2)} = -12$

un No. Using the formula for S_n ($r=-1/2$, $t_1=-16$, $n=3$)....

$$S_3 = \frac{(-16)\times(1-(-1/2)^3)}{1-(-1/2)}$$

$$= ?\ \frac{(-16)\times(1-(-1/8))}{(3/2)}$$ Try again.

un No, Gertrude. You know you could have just added $-16+8-4 = -12 = S_3$. But by the formula you have.....

```
  15          _____________ = -12 S3 = (-1 )x(    )
                  (3/2)

  16          Wan more chance.  I geev you wan more chance.

  17



  18          br e10c
e10c
   1          qu Find S5 in the following GP......1, -2, 4, .........

   2          ca 11
   3          fn editls    //all
   4          ty Very Goot!  S5 = 11.

   5          un No.  No.  No.  S5 is a positive number.  Try again.

   6          un No, and I'm not going to help you.

   7          un No.  S5=11.

   8          br e11
e10d
   1          qu Find S5 in the following geometric progression..... 3, -6, 12, ....

   2          ca 33
   3          fn editls    //all
   4          ty Splendid.

   5          br e7
   6          un No.  Try again.  (r=-2, n=5, t1=3)

   7          un No.  No.  Last chance to beat the other couples.  Try again.

   8          un No.  S5=33.

   9          br e11
e11
   1          rd Fortunately, I don't get emotional about htese things.  Take a five minute break,
   2             and reread the handout section on finding Sn of a geometric progression.
   3             When you are ready to proceed again, press the EOB button.

e12
   1          qu Find the sum of the first six terms of the progression 32, 16, 8.

   2          ca 63
   3          fn editls    //all
   4          ty Correct.

   5          ad -1//c6
   6          br e16       //c6//4
   7          un No.  Try again.  (r=1/2, n=6, t1=32)

   8          ad -1//c5
   9          un No.  S6=63.  You're not a Home Economics major, you're a Marine!

  10          ad -1//c5
  11          br e13
e13
   1          qu Find the sum of the first five terms of the following GP..... 16, 8, 4, .......

   2          ca 31
   3          fn editls    //all
   4          ty Marvelous, Henry.
```

```
     br el          //-c5//-3
     un Nope.  Try again.  (r=1/2, n=5, t1=16)

     ad -1//c5
     un Wrong again, Hazel.  Give it the ol' college try one more time.

     ad -1//c5
     un Nice try, Hazel, but you blew it.

                                  S5 = 16(1-(1/2)^5)
         ________________
            1-(1/2)

                                     = 16(31/32) = ?
                                         (1/2)

     ad -1//c5
     un One thing I'll say about you.....You're consistent.  No, Hazel, the correct answer

         was S5=31.  Let's try another.

     ad -1//c5
     br e14
e14
     qu In a GP, given that t1=16, r=1/2, and n=5.  Find S5.

     ca 31
     fn editls      //all
     ty That is correct.  Same problem as last time.

     un No, Cynthia, try again.  What's the difference between this problem and the one

         you just did?  That's right.  NONE!!

     ad -1//c5
     un Wrong, Cynthia.

                                   S5 = 16(1-(1/2)^5)
         ________________ = 31
            1-(1/2)

     ad -1//c5
     br e15
e15
     qu What is S4 in the following GP?      16, 8, 4, 2, ......

     ca 30
     fn editls      //all
     ty Correct.     S4 = 16(1-(1/2)^4)
         ________________
            1-(1/2)     = 30

     br e5a         //-c5//-6
     ad 3//c5
     br e12
     un No, Cynthia.  Just add the terms.  Come on now!

     ad -1//c5
     un No, Cynthia.  Who balances your check book?  The correct answer was S4=30.

     ad -c5//c5
     br e5a
e16
     qu In a G.P. in which t1= 54, r= -2/3 and n=4, find Sn.

     ca 26
     fn editls      //all
     fn editla      //all
     ad -c5//c5
     ad -1//c6
     ty Correct.

     br e20         //c6//+5
     wa -26
     fn editls      //all
     fn editla      //all
     ty Close. Check your signs. Try Again.

     ad -1//c5
     un No, try again.
```

```
   15      ad -1//c5
   16      un No.  S4=2[illegible].



   17      ad -1//c5
   18      br e17
e17
    1      qu Given t1= 54, r= - 1/3 and n=4. Find the sum of the G.P.

    2      ca 40
    3      fn editls    //all
    4      fn editla    //all
    5      ty Very good. The progression was 54, -18, 6, -2  . S4= 40


    6



    7      br e19        //-c5//-2
    8      un No.Try  again.
```

9
$$S_4 = \frac{54\ x(1-(-1/3)^4)}{1-(-1/3)}$$

```
   10      ad -1//c5
   11      un No. captain. (Hint. (-1/3)^4= +81

   12      ad -1//c5
   13      un No,S4=40 commander.

   14



   15      ad -1//c5
   16      br e18
e18
    1      qu Find Sn of a G.P. in which t1= -81, r= - 2/3 and n=5

    2      ca -55
    3      fn editls    //all
    4      fn editla    //all
    5      ty Nice work admiral.

    6



    7      br e10a       //c5//+5
    8      ad -c5//c5
    9      un No. Try again. Hint--(- 2/3)^5= -(32/243)

   10      ad -1//c5
   11      un Nope. Check your arithmetic.
```

12
$$S_5 = \frac{(-81)\ x(1-(-\ 2/3)^5)}{1-(-\ 2/3)}$$

```
   13      ad -1//c5
   14      un No. S5= -55

   15



   16      br e10a
e19
    1      rd In the next few problems you will be given three of the four values

    2         in the equation:
```

3
$$S_n = \frac{t_1(1-r^n)}{1-r}$$

```
    4                     and asked to find the value of the missing quantity. For

    5         example .  Given that S2=2, r=2 and n=2, you can
    6         solve the equation for t1. (In this  case t1=1).  As in the other

    7         problems pay very close attention to your signs. Ready to continue? Tickle my eoh.

    8
```

```
    9      ad -c5//c5
e20
    1      qu Given a G.P. with S4= 51/32 , r= - 1/4 and n=4. Find the value of t1.

    2      ca 2
    3      fn editls    //all
    4      fn editla    //all
    5      ad -1//c6
    6      ty Like Yeah man. t1=2.

    7



    8      br e24       //c6//+6
    9      un No. Try again. Hint--(- 1/4)^4= + 1/256

   10      ad -1//c5
   11      un No. The correct answer was t1=2.

   12         Sn= t1(1-r^n)
                  ---------
                    1-r

   13         51/32=t1 x(1-1/256)
                      -----------
                       1-(-1/4)


   14         t1= 256/255 x 5/4 x 51/32

   15           = 2

   16         The progression was 2, - 1/8, 1/8, -1/32 . I'll give you an easier one.

   17



   18      ad -1//c5
   19      br e21
e21
    1      qu In a G.P. in which S5= 363, r= 1/3 and n=5. Find the value of t1.


    2      ca 243
    3      fn editls    //all
    4      fn editla    //all
    5      ty Very Good Admiral. The progression was 243, 81, 27, 9, 3

    6



    7      br e24       //-c5//-1
    8      un No. Try again.  (1/3)^5 = 1/243

    9      ad -1//c5
   10      un No lieutenant.

   11         S5= 363= t1(1- 1/243)
                       ------------
                           2/3


   12         Try again.

   13      ad -1//c5
   14      un No chief.

   15         363 x 2/3 = t1 x(242/243)

   16         243 = t1


   17



   18      ad -1//c5
   19      br e22
e22
    1      qu If the sum of the first five terms of a G.P. is 183, the common ratio is - 1/3

    2         and n=5, find t1 of the progression.

    3      ca 243

    4      fn editls    //all
    5      fn editla    //all
    6      ty Give that man ten shares  of Comsat. Right, t1=243.
```

```
       The progr[illegible] is [illegible],-81, 27,-[illegible],3.



br e24        //-c5//-3
un No Hazel. Try again.

ad -1//c5
uo No Hazel. Wrong again.

   183 = t1 x(1-(-1/243))
          ____________
            1-(-1/3)

   Try again.

un Nope. Three strikes your out.

   183 x 4/3 x 243/244 = t1

   243=t1



ad -c5//c5
br e10a
e23
qu If S5 of a G.P. equals 122, n=5 and r= - 1/3 , find the value of t1.

ca 162
fn editls    //all
fn editla    //all
ty Now you're thinking. The progression was 162 +(-54)+ 18+(-6) +2.



un No. One more chance Hoyle. If you blow this one, not only will I send you

   back for some review , but I will also zapp you with about 110 volts on the way.

un Would you prefer DC or AC ? t1= 162.

   S5=122= t1(1-(-1/3)^5)
           ______________
             1-(-1/3)

   122 x 4/3 = t1(1-(- 1/243)

   122 x 4/3 x 243/244 = t1

   162=t1



br e5a
e24
qu In the series 1, 2, 4, . .. . . . how many terms must be added together so that

   Sn= 255

ca 8
fn editls    //all
fn editla    //all
ty Correct. Brilliant work honey..



ad -c5//c5
ad -1//c6
br e26        //c6//+6
un No. This isn't an easy problem. You should have already determined that

   t1=1, r=2 and Sn=255 [illegible] the formula
```

13

```
13        and solve for n.

14     ad -c5//c5
15     un No.
            255 = 1 x(1-2^n)
                    -------
                      1-2

16          255 x (-1) = 1 -2^n

17          -256  = -2^n        What is the answer?

18     un No Hazel.
                 2^n = 256

19               2n = 2^8

20                n = 8

21



22     br e25
e25
 1     -d In the next few problems you will be asked several questions concerning

 2        infinite geometric progressions.  Solving these problems should not be too

 3        difficult, but I would like you to go back and reread the last section

 4        in the handout, '' Finding S_n for an Infinite Geometric Progression '',

 5        before proceding. When you have finished your reading and are ready to

 6        continue, press my  eob's ( Gently, I'm getting sore.)

 7



e26
 1     qu As you read in the handout the formula for finding S_n of an infinite

 2        geometric series is    S∞= t_1
                                     ---
                                     1-r

 3        Use this formula to find S∞ of the infinite geometric progression in which

 4        t_1= 1 and r= 1/5.

 5     ca 5/4
 6     fn editls    //all
 7     fn editla    //all
 8     ty Correct. Note that the sum of the progression  1,5, 1/25, 1/125, 1/1625, . .

 9        gets closer and closer to but never quite reaches the value (or limit) 5/4.

10



11     ad -1//c6
12     br e30       //c6//+8
13     un No, Charlie.               S∞ =    1
14        = 5/4                           --------
                                          1-(1/5)



15     ad -1//c5
16     br e27
e27
 1     qu Find the sum of an infinite number of terms of the progression 1, 2/5, 4/25, . .

 2     ca 5/3
 3     fn editls    //all
 4     fn editla    //all
 5     ty Correct.

 6
```

```
 7      br e30        //-c5//-1
 8      un No. Use the formula
                                      t
                                S   =  1
                                 ∞    ---
                                      1-r

 9                      where r= 2/5. Try again

10      ad -1//c5
11      un No Harriet.                1
                              S  = ------  = ?
                               ∞   1-2/5

12      ad -1//c5
13      un Harriet you clod.  S = 5/3
                               ∞

14



15      ad -1//c5
16      br e28
e28
 1      qu Find S  as n approaches infinity of the following G.P. :
                 n
 2                              5, 25/8, 125/64,  . . . .

 3      ca 40/3
 4      fn editls    //all
 5      fn editla    //all
 6      ty Give that man one ''ATTABOY''

 7



 8      br e28        //c5//+6
 9      br e30        //-c5//-2
10      br e29
11      un No. Remember in an infinite G.P. all you need do to find S  is to plug
                                                                     ∞
12         the values of t  and r into the formula
                          1                                   t
                                                        S  =   1
                                                         ∞   ----
                                                             1-r

13         Try again.

14      ad -1//c5
15      un Come on Hazel. r= 5/8, t = 5. Try again.
                                   1
16      un No Hazel.  S = 5
                       ∞  -      = 40/3
                        1-5/8

17



18      br e28a
e28a
 1      rd I'd like you to reread the handout section on infinite geometric progressions

 2         before we continue. Remember the only differnce between finding S  of a regular
                                                                            n
 3         G.P. and S  for a G.P. is that in the latter case we are looking for the sum
                     ∞
 4         of an infinite number of terms rather than a finite number of terms such as S
                                                                                        5
 5         or S .  Because we are looking for the sum of an infinite number of terms
               6
 6         the formula changes from:
                                                 n
 7                          S =  t  x (1-r )
                             n    1
                                 ------------
                                     1-r
                                      n
 8                              t     t r
                                 1     1
                              =----  - ---
                                1-r
 9         1-r

10                 to

11          S  =  t
             ∞     1
                 ---
                 1-r

12         When you have reread the handout hit my eob and we'll try it one more time.

13
```

```
   14       ad -c5//c5
   15       br e25
e29
    1       qu Find the sum of an infinite number of terms of the following G.P.

    2                     8, 4, 2, 1, 1/2, 1/4, 1/8, 1/16, . . . . .

    3       ca 16
    4       fn editls    //all
    5       fn editla    //all
    6       ty Correct. S  = 16. Note that if you add the terms shown in the question,
                         n

    7          their  sum is 15 15/16. Thus the sum of this progression is approaching

    8          16 as the number of terms increases.

    9



   10       br e28a       //c5//+7
   11       un No. r= 1/2. Try again.

   12       ad -1//c5
   13       un No.
                                t
                                 1
                    S  =       ---
                     ∞         1-r

   14                    =    8
                             ---
                            1-1/2

   15                  =  ?

   16       ad -1//c5
   17       un No. S  = 16. Note that if you had added 8 + 4 + . . . 1/16 , you would have
                    n

   18          gotten  15 15/16.
   19          Thus the sum is apparently 16 as the number of terms increases.

   20



   21       br e28a
e30
    1       qu Find the sum of an infinite number of terms of the following geometric progression.

    2                          8, -4, 2, -1,.......


    3       ca 16/3
    4       fn editls      //all
    5       ad -1//c6
    6       ad -c5//c5
    7       ty Correct, Charlie.  Note that the formula works even though r is a negative number.


    8       br e33         //c6//9
    9       un No.  Note r is negative.  Use the formula for S .  Try again.
                                                              ∞

   10       un No.  r=-1/2, t =8.  Try again.
                             1

   11       un Come on now, Harriet.      S  =      8
   12          =  8   = 16/3               n    ---------
               ---                              1-(-1/2)
               3/2


   13       br e31
e31
    1       qu Find the sum of an infinite number of terms of the following GP.


    2                     16, -8, 4,............


    3       ca 32/3
    4       fn editls      //all
    5       ad -c5//c5
    6       ty Correct.  Crazy!


    7       un Wrong.  Try again.

    8       un No.        S  =      16
    9          = 32/3      n    ---------
                                1-(-1/2)
```

```
    1        br e..
e32
    1        qu Find the sum of the following GP..... 9, -3, 1, -1/3, 1/9, -1/27, .....

    2        ca 27/4
    3        fn editls     //all
    4        ty Atta boy!

    5        un No.  If you add the terms 9, -3,......., -1/27, the sum of these numbers is 6 20/27.
    6           From this you can assume that the sum of an infinite number of terms is very close
    7           to this number.  Using the formula........
    8
```

$$S_\infty = \frac{t_1}{1-r}$$

```
    9                 .......you should get an answer which is close to 6 20/27.  Try again.

   10        un No.  The correct answer was 27/4.

   11        br e28a
e33
    1        qu The common ratio of an infinite GP equals 1/4.  What must the first term be in order
    2           that the sum of an infinite number of terms shall be 80?

    3        ca 60
    4        fn editls     //all
    5        ad -c5//c5
    6        ad -1//c6
    7        ty Roger.  t1=60
    8

    9        br e36        //c6//10
   10        un Wrong.  Sn=80, r=1/4, t1=?  Try again.

   11        ad -c5//c5
   12        un Wrong.  Sn=60

   13        br e34
e34
    1        qu In an infinite geometric progression Sn=72/5, r=-2/3.  What is the value of t1?

    2        ca 24
    3        fn editls     //all
    4        ty Correct.

    5        br e36        //-c5//-1
    6        wa 24/5
    7        fn editls     //all
    8        ty No.  r=-2/3.  Try again.

    9        ad -1//c5
   10        un No.  Remember to find t1, use the formula.....
   11
   12              or
```

$$S_\infty = \frac{t_1}{1-r}$$

$$S_n(1-r) = t_1$$

```
   13           Try again.

   14        ad -1//c5
   15        un No, Hazel.        t1 = S∞(1-r)

   16                                = 72/5 x (1-(-2/3))

   17                                = 72/5 x 5/3

   18                             t1 = 24
```

```
   19        ad -1//c5
   20        br e35
e35
    1        qu The sum of an infinite number of terms of a GP is 40/3, and the common ratio is 5/8.

    2           What is the value of the first term?



    3        ca 5
    4        fn editls    //all
    5        ty Correct.  Way to go there, Harriet.



    6        br e28a      //c5//4
    7        un Wrong.  Try again.


    8        ad -1//c5
    9        un No.                       S∞ = t1
                                               ---
                                               1-r


   10                                S∞(1-5) = t1


   11                              40/3 x 3/8 = t1


   12           5 = t1



   13        br e28a
e36
    1        qu In a GP in which the first term is equal to 5 and the sum of an infinite number of terms

    2           is 50/11, what is the value of the common ratio?

    3        ca -1/10
    4        fn editls    //all
    5        ad -1//c6
    6        ad -c5//c5
    7        ty Now you're with me, Charlie.


    8        br e38       //c6//11
    9        un No, Hazel.  Try again.  Use the formula for S∞.


   10        ad -c5//c5
   11        un No, Hazel, you blew it again.


   12                                     50/11 = 5/(1-r)

   13                                       1-r = 5 x 11/50

   14                                       1-r = 11/10

   15                                        -r = 1/10

   16                                         r = -1/10



   17        br e37
e37
    1        qu t1 of an infinite GP = 27, S∞ = 81/4.  What is the value of r?


    2        ca -1/3
    3        fn editls    //all
    4        ty Correct.  Nice work, Sam.  I think you've got it.


    5        un No, Hazel.                     27
                                      81/4 = ----
    6           Try again.                    1-r.


    7        un Nope.               1-r = 27 X 4/81
```

```
  8                        1-r = 4/3

  9                         -r = 1/3

 10                          r = -1/3


 11        br e36
e38
  1        rd Another form of an infinite geometric progression is the repeating
  2           decimal.
  3           Thus the repeating decimal 0.3333......... is an infinite geometric progression
  4           of the following form.......

  5                 0.3 + 0.03 + 0.003 + 0.0003 + ..... (in which t1=0.3 and r=0.1)

  6           The limiting value of a repeating decimal may be found by determining t1 and r,
  7           and substituting these values in the formula for S∞.  Thus in the first
  8           example, the limiting value is 1/3.

  9                                      S∞ = 0.3
 10        1-0.1 = 0.3/0.9 = 1/3

 11           Suppose you wanted to find the limiting value of the decimal 0.74343434343....... .
 12           This problem is slightly different.  The number 0.74343.... is composed of 0.7 and
 13           the infinite geometric progression.....

 14                             .043 + .00043 + ..... (in which t1=.043 (not 0.7
 15           _______) and r=0.01)

 16              S∞ = 7/10 + t1/(1-r) = 7/10 + 43/990 = 368/495

 17           I'd like to have you try a few short problems.  When you've digested this garbage,
 18           press the EOB, and I'll see how well you regurgitate.
```

```
e38
  1        rd Another form of an infinite geometric progression is the repeating
  2           decimal.
  3           Thus the repeating decimal 0.3333......... is an infinite geometric progression
  4           of the following form.......

  5                 0.3 + 0.03 + 0.003 + 0.0003 + ..... (in which t1=0.3 and r=0.1)

  6           The limiting value of a repeating decimal may be found by determining t1 and r,
  7           and substituting these values in the formula for S∞.  Thus in the first
  8           example, the limiting value is 1/3.

  9                                      S∞ = 0.3
 10        1-0.1 = 0.3/0.9 = 1/3

 11           Suppose you wanted to find the limiting value of the decimal 0.74343434343....... .
 12           This problem is slightly different.  The number 0.74343.... is composed of 0.7 and
 13           the infinite geometric progression....

 14                             .043 + .00043 + ..... (in which t1=.043 (not 0.7
 15           _______) and r=0.01)
```

- 7/10 + 63/990 = 358/495

```
17          I'd like to have you try a few short problems.  When you've digested this garbage,
18          press the EOB, and I'll see how well you regurgitate.


e39
   1       qu Find the limiting value of the following repeating decimal :

                                                         0.88888 . . . . .

   2       ca 8/9

   3       fn editls    //all
   4       fn editla    //all
   5       ad -1//c6
   6       ty Crazy. S∞= 8/9

   7



   8       br e41      , //c6//+11
   9       un Nope.
                        0.8
               Sn =  -------
                      1-0.1
  10         = 0.8
              ----     = 8/9
              0.9

  11



  12       br e40
e40
   1       qu Find the limiting value of the following repeating decimal :    0.66666 . . . .


   2       ca 2/3
   3       cb 6/9
   4       fn editls    //all
   5       fn editla    //all
   6       ty Atta Boy.  S∞= 6/9 =2/3

                                     0.6
   7       un No               S∞=  ------
              = 0.6     = ?         1- 0.1
   8            ---
                0.9
   9          Try again.
  10       un No. S∞ = 2/3

  11       br e41
e41
   1       qu Find the limiting value of the following repeating decimal :   0.16666

   2       ca 1/6
   3       fn editls    //all
   4       fn editla    //all
   5       ty Roger.  S∞= 15/90 = 1/6

                                           0.06
   6       un No. You should have  S∞= 0.1 + ----   =  ?

                                           1-0.1

   7          What's the answer ?

   8       un No Hoyle.
                         S∞= 1/10 + 6/90
                           =
   9          15/90

  10                       = 1/6

  11



  12       br e42
e42
   1       rd O.K. Harriet. Now the hard part. The following questions are designed to
```

```
      bring together all your knowledge of A.P.'s and [illegible]
      will be word problems so read them carefully. [illegible] the
      sequence is an A.P. or a G.P. ( or an Infinite G.P. ) [illegible]
      ''Do I want to find the sum of this progression, or the last term,
      etc.'' From this information you can determine which formula (or formulas) apply
      and hopefully solve the problem.
         Before you squeeze my eob take a break and briefly review the handout.
      If you are having trouble with any particular problem, type in any old
      number and I'll give you a hint.
           Oh.    By the way. Pick up some more scratch paper.

e43
   qu A certain ball has the property that when it is dropped from any height (h)
      to the ground, it rebounds to the height 2/3 h.
      Suppose the ball is thrown to a height of 9 feet. How far will it travel
      before coming to rest? Include the first nine  feet that the ball is thrown
      in your answer.
   ca 54
   cb 54 feet
   cb 54'
   fn editls    //all
   fn editla    //all
   ty Very Good Hazel.

   br e44        //-c5//-1
   ad -1//c6
   br e46        //c6//+12
   un The ball will travel 9 feet up and 9 feet down, then 6 feet up and 6 feet down, etc.
      The distance traveled thus becomes an infinite G.P. ( Theoretically the ball never
      stops completely.) with a common ratio of 2/3. You are looking for S∞. Try again.
   ad -1//c5
   un No Hazel. Remember the first 9 feet count. t1= 18, r= 2/3. Try again.
   ad -1//c5
   un No Hazel.  S∞=  18/(1- 2/3) = 54

   ad -1//c5
   br e44
e44
   qu  A rotating wheel coming to rest makes 125 revolutions the first second.

      In any second after the first it makes 4/5 as many revolutions as it did in
      the preceding second. How many revolutions does it make before coming to rest?
   ca 625
   fn editls    //all
   fn editla    //all
   ty That's right.
```

```
   10        un This is just like the last problem. Try again.

   11        ad -1//c5
   12        un No. Let's look at it another way. If the wheel makes 125 revolutions the

   13           first second, it will make 100 revolutions the next second (4/5 of 125),

   14           80 revolutions the third second, and so on. Thus it is an infinite G.P.

   15           with r=4/5 and t1= 125. What is the correct answer?

   16        ad -1//c5
   17        un No.  S_=625.  I'm going to send you back to review infinite GP's.



   18        br e28a
e45
    1        qu What distance will an elastic bra traverse before coming to rest

    2           if it is pulled out to a distance of 15 feet and after each time

    3           it hits ''home'' it rebounds 2/3 the distance?

    4           (Include the first 15 feet.)

    5        ca 90
    6        cb 90 feet
    7        cb 90'
    8        fn editls    //all
    9        ty Rog.  (If you could ever pull one of those things out 15 feet.)



   10        ad -1//c6
   11        un No.  You've got to concentrate on the mathematical solution to this problem

   12           and disregard other irrelevant aspects.  t1=30, r=2/3.  Find S_.

   13        ad -1//c5
   14        un No.          S_ = 30
   15           1-2/3 = 90



   16        ad -1//c5
   17        br e25
e46
    1        qu Find the first term of an infinite GP whose sum is 243

    2           and whose second term is 54.

    3        ca 162
    4        cb 81
    5        cb 81,162
    6        cb 162,81
    7        fn editls    //all
    8        ad -1//c6
    9        ty Very good.  (There were actually two answers to this prohlem, t1 = 162 or 81.)



   10        un No.  To solve this problem you will have to use two equations....


                          t1
   11               243 = ----
   12        and     54 = t1 r(n-1)

                          1 - r

            Solve these two equations for t1.  Try again.

   13
   14        ad -1//c5
   15        un No.  t1=162 or t1=81 are correct answers.



   16        ad -1//c5
   17        br e47
e47
    1        qu Each individual has two parents (I'm told.) and these in turn each had two parents, and so on.

    2           Assuming that these ancestors were all different individuals, how many ancestors does one

    3           have going back six generations?

    4        ca 126
    5        fn editls    //all
    6        ty Correct, Charlie.  Very good.
```

```
     7        ad -1//c6
     8        un No.  People multiply.  This is a GP, and you want S6.  Try again.


     9        ad -1//c5
    10        un No.  S6=126


    11        ad -1//c5
    12        br e48
e48
     1        qu The second term of a GP is 3 and the fifth term is 81/8.  Find the fourth term.

     2        ca 27/4
     3        cb 6 3/4
     4        fn editla    //all
     5        fn editls    //all
     6        ty Correct.  The progression was 2, 3, 9/2, 27/4, 81/8.


     7        ad -1//c6
     8        un No.  From the formula for finding tn of a GP, you can derive two equations which can be solved

     9           simultaneously for r and t1.  Knowing these values, you can easily find t4.  Try again.

    10        ad -1//c5
    11        un Nope.       81/8 = t1r^4    and  ` 3 = t1r.

    12           Solve these equations for t1.  Try again.

    13        ad -1//c5
    14        un No.                81/8 = t1 x (3/t1)^4

    15                              81/8 = t1 x 81/(t1)^4

    16                               1/8 = 1/(t1)^3

    17                               (t1)^3 = 8

    18                                t1 = 2    and    r=3/2
    19
                                      t4 = t1r^(4-1)

    20                                   = 2 x (3/2)^3

    21        ,                          = 27/4       The progression was 2, 3, 9/2, 27/4, 81/8.


    22        br e49
 e49
     1        qu The market for playboy magazine is now 500,000 subscribers and the number

     2           of subscribers has been increasing at the rate of 5 percent per year.

     3           If this rate of growth continues, how many subscribers will Playboy

     4           have at the end of three years?

     5        ca 578810
     6        cb 578,810
     7        fn editls    //all
     8        fn editla    //all
     9        ad -1//c6
    10        ty Correct. Very Good.

    11


    12        un No. The problem requires finding t4 of a G.P. in which t1= 500,000

    13           and r=1.05. (Note you want t4 NOT t3.)
```

```
 14        [illegible]
 15        [illegible]

 16                  t4=t1r^n

 17                   = 500,000 x (1.05)^3

 18                  = 578,810

 19



 20        ad -1//c5
 21        br e50
e50
  1        qu O.K. Now for a few really hard ones. Remember if you get stuck press the

  2           eob and I'll give you a hint.

  3              There are four numbers of which the first three are in arithmetic progres-

  4           sion and the last three are in geometric progressinn. Their sum is 105

  5           and the fourth number divided by the second = 9/4.

  6                        Find the first term of the A.P.


  7        ca 10
  8        cb 70
  9        cb 10,70
 10        cb 70,10
 11        fn editls    //all
 12        fn editla    //all
 13        ad -1//c6
 14        ty By Jove Mabel, he did it. Excellent Admiral. There were actually two

 15           progressions that will fit these conditions.

 16                  10, 20, 30, 45      and   70, 20, -30, 45

 17



 18        un No. This problem takes quite a long time and requires using a lot of equations.

 19                        1)  t1 +t2 +t3 +t4 = 105

 20           In terms of A.P.'s                             In terms of G.P.'s
                                                                    t3
 21           2) t2=t1 +d                                    5) r=  ----
                                                                    t2

                                                                     t4
 22           3) t3= t2 +2d                                  6)  r=  ----
                                                                     t3


 23           4) t4= 9t2/4 = 9/4 x (t1 +d)
 24                         or  7) t3/t2 = t4/t3


 25           Using these equations, you can solve for t1. ( You've still got quite

 26           a ways to go. Try putting everything in terms of t1 and d.

 27        ad -1//c5
 28        un No.  Wrong again.


 29                 (1)  t1 + t2 + t3 + t4 = 105

 30           substituting (2), (3), (4)....t1 + (t1+d) + (t1+2d) + (9t1/4 + 9d/4) = 105

 31                     (21/4)t1 + (21/4)d = 105

 32                 (8)                t1 + d = 20     (or d = 20 - t1)

 33                  (7)                 t3/t2 = t4/t3
```

```
   Substituting ([illegible]), ([illegible]), ([illegible]) into ([illegible])........

   9/4 x (t1 + [illegible])         t1 + [illegible]
   ------------------------        ----------------- .
   t1 + 2d                          t1 + [illegible]

   Substituting for d from ([illegible])...........

                       t1 + 2(20-t1)
   9/4 x (t1 + 20 - t1)
   t1 + (20 + t1)      ---------------
   t1 + 2(20 - t1)

    and (9)                  40 - t1
      45                     ------- =
   --------                    20
   40 - t1

   Study this process carefully.  The next two problems are solved the same way.
   To solve for t1, use equation (9).  What's the answer?

ad -1//c5
un No.  I'm afraid you'll never be a math star.

                 40-t1
   45            ----- =
  -----           20
  40-t1

                 (t1)^2 - 80t1 + 700 = 0

                   (t1-70)(t1-10) = 0

                     t1 = 70 or 10

   There were two progressions which fit these conditions.....

               70, 20, -30, 45    and    10, 20, 30, 45


ad -1//c5
br e51
e51
qu Three numbers whose sum is 21 are in geometric progression. If 1 is
   subtracted from the first, 2 from the second and 6 from the third, the
   the remaining numbers are in arithmetic progression. Find the second term of
   the G.P.

ca 6
fn editls    //all
fn editla    //all
ty Correct. The numbers were 3,6,12. Not many students solve this problem.
   Very Good work.


ad -1//c6
un No. This problem is quite similar to the last one.

                     1) t1 +t2 +t3 = 21

   In t r[illegible]
```

```
        [illegible]                              3) (t_1 -1) +d= (t_2 -2)

                                                 4) (t_2 -2) +d= (t_3 -6)

                                                 5) (t_1 -1) +2d = (t_3 -6)

   Hint put everything in terms of t_2 and d. Try again.

ad -1//c5
un Nope.          t_1+t_2+t_3=21

            (t_2-d-1)+ t_2+(t_2+d+4)=21

                      3t_2+3=21

                      3t_2=18

                       t_2= 6

     (Note. You didn't even have to worry about the G.P.)

        The terms were 3,6,12.



ad -1//c6
br e52
e52
qu Find the second term of the A.P. whose first term is 2 and whose second

   term , fourth term and eigth term form a geometric  progression.

ca 16
fn editls    //all
fn editla    //all
ty Outstanding. The progression was 2,4,6,8,10,12,14,16.



ad -1//c6
un Some people are lucky and can solve this problem intuitively,but

   if you can't see it right away, you have to set up several equations

   and solve them simultaneously ( same jazz as the last two problems).

   O.K. You say to yourself. What equations can I get?

   In Terms of A.P.'s you know that          In terms of G.P.'s you know that

    t_n=t_1+(n-1)d                             t_n= t_1r^(n-1)

   t_2= 2+(2-1)d                              t_2r= t_4

   t_4= 2+(4-1)d                              t_4r= t_8

   t_8= 2+(8-1)d                              or

                                              t_4/t_2 = t_8/t_4

   Solve these for d and you can easily find t_2. Try again.

ad -1//c5
un No. d=2 and t_2=4.  The progression was 2,4,6,8,10,12,14,16.



ad -1//c5
br e53
```

```
e53
        qu The sum of three numbers in geometric progression is 52. If 8 is added
           to the middle term , the other two being left unchanged, an arithmetic
           progression is formed. Find the first term of the geometric progression.
        ca 4
        cb 36
        fn editls    //all
        fn editla    //all
        ty Excellent. One more question and you can go home. You now should
           understand the theory of A.P.'s and G.P.'s.


           un No. And I won't help you. You should be able to do this on your own.
        ad -1//c5
        un Nope.
        ad -1//c5
        un Sorry. The G.P. was 4,12,36. I'll give you one more chance to pass the
           course. Read the next question carefully.


        br e54
e54
        qu As I was going to Saint Ives , I met a man with seven wives. Every wife
           had seven sacks, every sack had seven kits, kits, cats, sacks and wives
           how many were going to St. Ives?
        ca 1
        fn editls    //all
        fn editla    //all
        ad -1//c6
        ty Nice work Hazel you passed the course.


        wa 2403
        fn editls    //all
        fn editla    //all
        ty You multiply well but can't read worth a damn. There was only one person
           going to St. Ives. I Was. My four year old son knows the answer to that.
        un No. Read the question. My son knows the answer and he's only four.
        un No stupid. Only one . Me.


        br e55
```

```
e55
rd You have now successfully (I Hope) completed the course in arithmetic
   and geometric progressions. If there are any particular areas you would like to
   review, included below is a list of review segments. Type go to and the
   label listed beside the problem area.
               Problem Area                              Label
   Finding Sn of a G.P.                                  e1
   Infinite G.P.'s                                       e25
     Repeating decimals                                    e38
   Word problems                                         e42
   If you do some review , type GO TO e54 when you are ready to quit and
   you will be returned to this point.
   Those of you who are ready to retire right now, just sign off and I'll
   see you around the campus. Good Luck.
ns5
```

APPENDIX B

Listing of
Subject Areas and Associated Labels

APPENDIX B

LISTING OF SUBJECT AREAS AND ASSOCIATED LABELS

This listing is designed to be used as a "ready-reference" for the student who desires to review a particular area of the course material. In order to go to the subject area desired, simply type "go to" followed by the associated label and then press the "EOB".

Section	Section Area	Label
A	Introduction and Definitions	
	Set	a1
	Sequence/Progression	a3
	Term	a6
	Subscript	a20
B	t_n of Arithmetic Progressions	
	AP/Common difference	b1 or b6
	Number/Value of terms	b5
	t_n formula	b8
	t_n problems	b8 or b16
	Introductory review	b21
C	S_n of Arithmetic Progressions	
	S_n of Arithmetic Progressions	c1
	Sum of 1st n terms	c7
	Sum of t_{11} thru t_{15}	c16
	Sum word problems	c18
D	t_n of Geometric Progressions	
	Finding t_n	d14
	Finding r (the common ratio)	d23
	Finding t_1	d28
	Finding n	d32
	Word problems	d38

E S_n of Geometric Progressions

Finding S_n of a G.P. e1

Infinite G.P.'s e25

Repeating decimals e38

Word problems/Review e42

APPENDIX C

Sample Print-out

of

Student Response Record

```
PRINT                COURSE.       APGP                  *

STUDENT RESPONSE      STUDENT                  DATE     REC. RESP. COUNTERS                                         LABEL     SEQ
                                             MO/DA/YR  OPT. TYPE   1    2    3    4    5    6    7    8    9    10


NO*
                    S9905          J ANIEC 07/12/65  7    CA                     2                        1    1  D49         2
125*
                    S9905          J ANIEC 07/12/65  7    CA                     2                        1    1  D51         2
12*
                    S9905          J ANIEC 07/12/65  7    CA                     2                        1    1  D52         2
31*
                    S9905          J ANIEC 07/12/65  7    CA                     2                        1    1  E1          2
156*
                    S9905          J ANIEC 07/12/65  7    CA                     2         1              1    1  E2          2
104*
                    S9905          J ANIEC 07/12/65  7    CA                     2         2              1    1  E7          3
60*
                    S9905          J ANIEC 07/12/65  7    UN                     2         3              1    1  E12         7
631/2*
                    S9905          J ANIEC 07/12/65  7    UN                     2    1    3              1    1  E12         9
31*
                    S9905          J ANIEC 07/12/65  7    CA                     2    2    3              1    1  E13         2
26*
                    S9905          J ANIEC 07/12/65  7    CA                     2    2    3              1    1  E16         2
40*
                    S9905          J ANIEC 07/12/65  7    CA                     2         4              1    1  E17         2
2*
                    S9905          J ANIEC 07/12/65  7    CA                     2         4              1    1  E20         2
243*
                    S9905          J ANIEC 07/12/65  7    CA                     2         5              1    1  E21         2
8*
                    S9905          J ANIEC 07/12/65  7    CA                     2         5              1    1  E24         3
5/4*
                    S9905          J ANIEC 07/12/65  7    CA                     2         6              1    1  E26         5
5/3*
                    S9905          J ANIEC 07/12/65  7    CA                     2         7              1    1  E27         2
16/3*
                    S9905          J ANIEC 07/12/65  7    CA                     2         7              1    1  E30         3
32/3*
                    S9905          J ANIEC 07/12/65  7    CA                     2         8              1    1  E31         3
27/4*
```

APPENDIX D

Text Book
for
Programmed Instruction Course
in
Arithmetic and Geometric Progressions

ARITHMETIC AND GEOMETRIC

PROGRESSIONS

Text material to be used
in conjunction with
Computer Assisted
Instruction

CAN TEACHERS BE REPLACED BY A COMPUTER?

Probably not, but we'd like to find out if it is possible. Hopefully, using the following textual material, and a typewriter which is controlled by a computer, you can learn all about arithmetic and geometric progressions without the aid of a teacher.

The course is specifically designed for students with widely varying backgrounds in mathematics. Each of you will progress according to your individual capabilities. If you have studied progressions before, you should proceed quite rapidly. If you have never heard of progressions, you will be given extra practice. As you begin to understand the material, you will be able to move more rapidly.

You say you can't type? No sweat! The course is designed for the "hunt and peck" man. About the longest thing you will have to type will be your name. There are instructions on how to use the typewriter posted on the wall beside you. Read them once and you should have no problems.

You are afraid of ruining the machine? Don't worry about that either. The computer can handle almost anything short of physical violence.

The course is designed so that you alternate between reading small sections of the handout material and answering questions on what you've read. The questions are stored in the computer's "memory" and automatically presented to you via the typewriter.

If you are ready to proceed, read the first section of the handout entitled "Definitions." When you have finished reading this section, read the instructions on how to operate the typewriter. If you have any questions, ask one of the operators in the next room.

GOOD LUCK!

ARITHMETIC AND GEOMETRIC PROGRESSIONS

I. DEFINITIONS

Often in mathematical work, groups of three or more numbers are arranged in some definite order, or sequence. Such grouping or sequence of numbers is called a progression. The individual numbers are called the terms of the progression and are named from the left to the right, first term, second term, etc. For example the terms 2, 4, 6, 8, 10,......form a progression.

There are many kinds of progressions. We shall discuss in this unit only two of the simpler ones. These are called arithmetic and geometric progressions.

Before proceeding with the discussion of these progressions, it will be necessary to have an understanding of some of the terminology used in this course. Some essential definitions follow :

Set--A group or collection of definite, distinct objects (such as people, birds, ships, books, numbers, etc.).

Sequence/progression (of numbers)--A set of numbers in some definite order. The terms progression and sequence are used synonomously.

Terms--The individual numbers of the sequence or progression.

[illegible]

[illegible]

[illegible]

[illegible]

[illegible]

[illegible]

[illegible]

[illegible]

Examples: 4,1,9,7,16,19 is a set of numbers, It is simply a group of numbers in no definite order. Because this set has no definite order, it is not a sequence. 2,4,6,8,10 is a set of numbers in some definite order and therefore is a sequence of numbers. The number 4 is a term in that sequence; in this example it is the second term; 8 is the fourth term.

$a_1, a_2, a_3, a_4, \ldots\ldots, a_n, \ldots\ldots$ is a sequence. a_1 is the first term. a_2 is the second term, and a_n is the nth term.

The number 1 in a_1 is called a subscript. The subscript denotes the order in which the terms are arranged (1 before 2, etc.).

Hence, $a_1, a_2, a_3, a_4, \ldots\ldots, a_n, \ldots\ldots$ is a sequence of terms in the order indicated by the subscripts.

4,6,8,10,12 is a finite sequence (series); it contains a finite number of terms, in this instance, 5.

4,6,8,10,12,.... is an infinite sequence (series); that is, it contains an infinite number of terms since it continues expanding ad infinitum.

You are now ready to "tackle the machine." Read the instructions posted beside the typewriter. Don't worry about typing errors or wrong answers. You are not being graded: This is a teaching device, not a test.

II. ARITHMETIC PROGRESSIONS

A. Finding t_n of an Arithmetic Progression

An Arithmetic Progression (A.P.) is a sequence of numbers in which each term after the first is formed by adding a constant quantity called the common difference to the preceding term. The common difference may be either a positive or negative value, but never zero. Thus, the set 1,2,3,4,5 is an arithmetic progression consisting of five terms where the first term is 1, and the common difference is plus 1. The set 5,4,3,2,1 is an arithmetic progression consisting of five terms where the first term is 5, and the common difference is minus 1. Some further examples are:

A.P.	No. of TERMS	1st TERM	COMMON DIFFERENCE
3,7,11,15,19	5	3	+4
30,28,26,24	4	30	-2
a,a+d,a+2d,a+3d	4	a	+d
-3,-5,-7,-9,-11,-13	6	-3	-2
-7,-3½,0,3½,7,10½	6	-7	+3½

The common difference may be found by substracting any term of the sequence from the term that follows it. For example, in the A. P. 2,5,8,11,14,17 we can determine that the common difference equals 3 by subtracting any term from the term immediately following (5-2 = 3, 8-5 = 3, 17-14 = 3, etc.).

We can write a general expression for finding any term in an A.P. if we know the first term (t_1), the common difference (d), and the number of the term for which we are looking (n). (For example, if we are trying to find the fifth term, n would be equal to 5.).

The expression to find the nth term of an A.P. is:

$$\boxed{t_n = t_1+(n-1)d}$$

t_n = the value of the term we are trying to find.

t_1 = the value of the first term of the progression.

n = the number of the term for which we are looking.

d = the common difference.

For example, let us look at the A.P. 3,7,11,15,19,....

Assume that the fifth term, 19, is unknown to us. We can use the formula to find it.

$$t_n = t_1+(n-1)d$$

$$n = 5$$

$$t_n = t_5$$

$$t_1 = 3$$

$$d = 4$$

$$\begin{aligned} t_5 &= 3+(5-1)4 \\ &= 3+(4)(4) \\ &= 19 \end{aligned}$$

19 is therefore the fifth term of the given sequence.

If we were told the progression used previously $(3,7,11,15,19,\ldots,t_{50})$ consisted of fifty terms and we were asked to find the value of the thirty-fifth term, we would utilize the same formula.

In this problem $t_1 = 3$, $d = 4$, and $n = 35$.

$$\begin{aligned} t_{35} &= t_1+(n-1)d \\ &= 3+(35-1)4 \\ &= 3+(34)(4) \\ &= 139 \end{aligned}$$

We can alos, of course, solve the formula $(t_n = t_1+(n-1)d)$ for t_1, n, or d, should any one of these values be the unknown quantity in a problem.

(Though not required for the successful completion of this program, those students interested will find the derivation of the formula for finding any term of an arithmetic progression on page 260, para. 15-3 of "ALGEBRA and TRIGONOMETRY" by Alvin K. Bettinger and John A. Englund. Scranton: International Textbook Company, 1960).

READY FOR SOME MORE PARTICIPATION? GO TO THE MACHINE!

B. Finding S_n of an Arithmetic Progression

We can also determine the sum (S_n) of a praticular number of terms of any A. P. if we know the first term (t_1), the last term (t_n), the common difference (d), and the total number of terms being added (n). (For example, if we are trying to find the sum of the first five terms, n would be equal to 5.) Note the slight difference in usage between "n" here as opposed to the previous formula; before we were talking about the number of the specific term in question whereas now "n" refers to the total number of terms being added.

The formula used to find the sum of n terms in an A.P. is:

$$\boxed{S_n = \frac{n(t_1+t_n)}{2}}$$

S_n = the sum of n terms.

n = the total number of terms being added.

t_1 = the value of the first term.

t_n = the value of the last term being added.

Another useful form of this expression can be found by substituting $t_1+(n-1)d$ for t_n. The new equation is:

$$\boxed{S_n = \frac{n}{2}\left[2t_1+(n-1)d\right]}$$

This form is particularly useful when the value of t_n is unknown.

EXAMPLE

Using the A.P. 3,7,11,15,19 to illustrate the first formula's use:

$$S_n = \frac{n(t_1+t_n)}{2}$$

Check:

$$\begin{array}{r} 3 \\ 7 \\ 11 \\ 15 \\ \underline{19} \\ 55 \end{array}$$

$n = 5$

$t_1 = 3$

$t_n = 19$

$$S_n = \frac{5(3+19)}{2}$$

$$= \frac{5(22)}{2}$$

$$= 55$$

(Those students interested will find the derivation of the formula for finding S_n, and the alternate expression of S_n, on page 261, para. 15-4 of "ALGEBRA and TRIGONOMETRY", by Bettinger and Englund.)

READY FOR SOME MORE PARTICIPATION? GO TO THE MACHINE!

III. GEOMETRIC PROGRESSIONS

A. Finding t_n of a Geometric Progression

A Geometric Progression (G. P.) is a sequence of numbers in which each term after the first is the result of multiplying the preceding term by a constant called the common ratio. The common ratio may take on any positive or negative value except + or - 1 or zero. For example, the set 4,8,16,32,64 is a geometric progression consisting of five terms; the first term is 4, and the common ratio is + 2. The set 32,-16,8,-4,2 is a geometric progression consisting of five terms with a first term of 32 and a common ratio of - ½. Some further examples are:

G. P.	No. of TERMS	1st TERM	COMMON RATIO
1,2,4,8,16	5	1	2
a,ar,ar^2,ar^3	4	a	r
$1,(1+i),(1+i)^2,(1+i)^3$	4	1	(1+i)
1,-4,16,-64	4	1	-4

The common ratio may be found by dividing any term of the progression into the term that follows. For example, in the G. P. 1,2,4,8,16 we can determine that the common ratio equals 2 by dividing any term into the term immediately following ($2 \div 1 = 2$, $8 \div 4 = 2$, etc.). (Caution.... This common ratio must apply to all terms).

We can write a general expression for finding any term in a G. P. if we know the first term (t_1), the common ratio (r), and the number of the term for which we are looking (n).

The expression to find the value of the nth term in a G.P. is:

$$\boxed{t_n = t_1 r^{n-1}}$$

t_n = the value of the term we are trying to find.

t_1 = the value of the first term.

r = the common ratio.

n = the number of the term for which we are looking.

For example, let us find the fifth term of the G.P. 1,2,4,8,....

$$t_n = t_1 r^{n-1}$$

$$t_1 = 1$$

$$r = 2$$

$$n = 5$$

$$\begin{aligned} t_5 &= (1)(2)^{5-1} \\ &= (1)(2)^4 \\ &= 16 \end{aligned}$$

Therefore, 16 is the value of the fifth term of the given G.P.

(Those students interested will find the derivation of the formula for any term of a geometric progression on page 265, para. 15-8 of "ALGEBRA and TRIGONOMETRY" by Bettinger and Englund.)

READY FOR SOME MORE PARTICIPATION? GO TO THE MACHINE!

B. Finding S_n of a Geometric Progression

In order to find the sum of n terms in a G.P. we must know the first term (t_1), the common ratio (r), and the total number of terms we are adding (n).

The expression to find the sum of n terms in a G.P. is:

$$\boxed{S_n = \frac{t_1(1-r^n)}{1-r}}$$

S_n = the sum of n terms of the G.P.

t_1 = the value of the first term.

r = the common ratio.

n = the total number of terms being added.

Again, as in A.P.'s, note the slight difference in the meaning of n between the two formulas.

To illustrate let us find the sum of the G.P. 1,2,4,8,16. Using the formula to find:

$$S_n = \frac{t_1(1-r^n)}{1-r}$$

$n = 5$

$t_1 = 1$

$r = 2$

$$\begin{aligned} S_5 &= \frac{1(1-2^5)}{1-2} \\ &= \frac{1(1-32)}{-1} \\ &= \frac{-31}{-1} \\ &= 31 \end{aligned}$$

Check:

$$\begin{array}{r} 1 \\ 2 \\ 4 \\ 8 \\ \underline{16} \\ 31 \end{array}$$

(Those students interested will find the derivation of the formula for finding S_n on page 266, para. 15-9 of "ALGEBRA and TRIGONOMETRY" by Bettinger and Englund.)

READY FOR SOME MORE PARTICIPATION? GO TO THE MACHINE!

C. Findings S_n for an Infinite Geometric Progression.

In a Geometric Progression such as 1,2,4,8,..., in which the common ratio is greater than 1, each term is greater than the preceding term. Eventually, if the number of terms is increased without limit, their sum will become infinitely large.

But in a geometric progression such as 1,½,¼,1/8,..... in which the common ratio is less than 1 in absolute value (r can be positive or negative), each term is less than the preceding term, and as the number of terms becomes very great, each term becomes progressively smaller. In such a series, as the number of terms increases without limit, the sum of the terms does not increase without limit, but approaches some definite number. (Warning .....This is only true for geometric progressions).

For example, in the series 1,½,¼,1/8,....the sum of four terms is 1 $^7/8$, the sum of eight terms is 1 $^{127}/128$, the sum of 16 terms is $\frac{32767}{32768}$, etc. As the number of terms is increased, the sum approaches nearer and nearer to (but never quite reaches) 2. Mathematicians would say "as n (the number of terms) approaches infinity, S_n approaches 2."

As you know, the formula for the sum of a G.P. is:

$$S_n = \frac{t_1(1-r^n)}{1-r}$$

Now, if the absolute value of r lies between 0 and 1, r^n is smaller than r, and when n increases without limit, r^n approaches zero ($r^n \rightarrow 0$). For example in a series in which $r = \frac{1}{2}$:

$$\text{If } n = 2, \quad r^n = \tfrac{1}{4}$$

$$\text{If } n = 8, \quad r^n = \frac{1}{256}$$

$$\text{If } n = 16, \quad r^n = \frac{1}{65{,}536}$$

You can see that as n increases, r^n gets smaller and smaller, approaching zero. When r^n approaches zero, (i.e...as n becomes very large) the formula for finding S_n tends to......

$$\frac{t_1(1-0)}{1-r} = \frac{t_1}{1-r}$$

This equation is written in mathematical terms:

$$\lim_{n \Rightarrow \infty} S_n \rightarrow \frac{t_1}{1-r} \quad \text{or} \quad \boxed{S\infty = \frac{t_1}{1-r}}$$

(where $S\infty$ stands for the sum of an infinite geometric progression). (Remember, this formula is valid only when the absolute value of r lies between 0 and 1.)

Perhaps a few problems will help you to understand this formula.

Example 1: Find the sum of an infinite number of terms of the progression $8, 4, 2, 1, \frac{1}{2}, \ldots$

Note: $r = \frac{1}{2}$

$$S_\infty = \frac{t_1}{1-r}$$

$$= \frac{8}{\frac{1}{2}}$$

$$= 16$$

Example 2: In a geometric progression in which the common ratio is $-\frac{1}{4}$, what must the first term be in order that the sum of an infinite number of terms is equal to 80?

$$S_\infty = \frac{t_1}{1-r}$$

$$80 = \frac{t_1}{1-(-\frac{1}{4})}$$

$$80 \times 5/4 = t_1$$

$$100 = t_1$$

Note: The progression was $100, -25, +6\frac{1}{4}, \frac{-25}{8}, \frac{+25}{16}, \ldots\ldots$

The sum of these terms approaches 80.

(Those students interested will find the derivation of the formula for finding S_∞ on page 269, para. 15-11 of "ALGEBRA and TRIGONOMETRY" by Alvin K. Bettinger and John A. Englund. Scranton: International Textbook Company, 1960.

READY FOR SOME MORE PARTICIPATION? GO TO THE MACHINE!

APPENDIX E

Student Typing Instructions
for use with the
IBM 1052 Printer-Keyboard

# STUDENT TYPING INSTRUCTIONS
for use with
the
IBM 1052 Printer-Keyboard

COMPUTER ASSISTED INSTRUCTION AND YOU

Some people talk to horses, some people talk to themselves, and some people talk to computers. If you would like to become a member of the latter group (probably the sanest of the lot!), press onward.

The enclosed instructions are designed to simplify your conversations with the IBM 1401 (that's the computer). It'll probably take a few minutes before you feel comfortable on the keyboard. (Some people never do feel comfortable on keyboards!).

Above all---relax and enjoy yourself!

HOW TO TALK TO THE COMPUTER

.....You will already have been registered as a student in this course before you first meet the computer.

.....The name of the course is "apgp" (arithmetic progressions, geometric progressions).

.....You will be assigned a particular number (for example, s1234).

Now, when you are ready to "sign on" the machine, follow the procedure below:

1. Check with the operator to ensure that the computer is ready.
2. Wait for the typewriter's green PROCEED light to come on (You can never type unless it is), and then
3. Engage in the following exchange:

You : sign on (EOB)*
Computer: type course name
You : apgp (EOB)
Computer: type your number
You : s1234 (EOB) (for example)
Computer: your name is John Doe

Section A INTRODUCTION AND DEFINITION
You : (EOB)
Computer: ---The first question---
You : your answer (EOB)
Computer: ---Comment and next question---
You : your next answer (EOB)

and

so

on

4. When you wish to terminate the dialogue:

You : sign off (EOB)

Computer: you have been signed off.

(You may sign off at any time).

---

*(EOB) stands for "end-of-block". To "execute" an EOB, you must hold down the ALTERNATE CODING key and then press the 5-key. This must be done after every student response.

OPERATING NOTES

1. Always check with the operator to ensure that the system is ready; then sign on.

2. The typewriter's green PROCEED light must always be *ON* before you can type.

3. The PROCEED light can cycle *on* and *off* indefinitely *before* you commence typing---don't worry about it.

4. However, *once you have started typing your response*, if you hesitate too long (approximately 10 seconds) between striking any two keys, the PROCEED light will go *out*. This means you have *lost* your message. When the light next comes *on*, you *must* follow the CANCEL procedure of item 5. (In order to avoid this delay, just make sure you know what you want to say before you commence typing).

5. If you make an error, and realize it *before* you type the EOB, your message can be cancelled by *holding down* the ALTERNATE CODING key while pressing first the zero (CANCEL) key, and then the 5 (EOB) key. The machine will type "please repeat", and you must then retype the entire message.

6. If you make a typing error, but do not notice it until *after* you type the EOB---it's too late! The computer will analyze your response as you typed it and respond accordingly. If you have, for instance, misspelled a word, the computer will interpret this as an incorrect answer. So be careful---Take your time.

7. You may at any time type, for example, "go to a5 (EOB). This will branch you to the question named. A list of subject areas and associated labels will be furnished to you for reference purposes.

8. You may type "sign off (EOB)" at any time. When you "sign on" again, you will automatically return to the place in the course where you last signed off.

9. You may, Any Time You Are Confused, type help (EOB) The correct answer will then be supplied. You must then type back the same answer if you wish to continue.

10. In addition, if you are stuck on a particular problem, press the EOB keys and the computer will give you a hint. If you are still stuck, press them again and you will receive another hint.

11. Consult the MALFUNCTION PROCEDURES list on the bulletin board beside the typewriter if the system appears to be functioning abnormally, or not at all.

12. Don't Let the Machine Rush You. The PROCEED light can cycle on and off for hours before you start to type. It won't hurt anything if it does. So take your time.

TYPING INSTRUCTIONS

The computer does *not* forgive typing errors, misspelling, etc. If you press any key by mistake, do *not* try to correct the situation in any way except by following the CANCEL procedure above.

Often an answer can be typed in one of several ways. Usually all normal forms will be accepted as correct. However, several conventions have been established to simplify your typing.

1. *No* unnecessary spaces, periods, zeros, or plus signs should be typed.
2. Don't use upper case letters (capitals).
3. Use a slash(/) for fractions (¼. incorrect; 1/4, correct).
4. When using a whole number with a fraction, place a space between the whole number and the fraction(31/2, incorrect; 3 1/2, correct).
5. Use numerals instead of spelling out numbers. This typewriter has the number *1* available; do not use the small L.
6. Push the LINE-FEED button before typing a subscript (this button causes the typewriter to print one-half line *below* the main line). Then, after typing the subscript, press the BACK-FEED button to return to the main line.
7. Use BACK-FEED for superscripts (a^2), followed by LINE-FEED to return to the line.
8. Never give units (ft.,$,etc.) unless they are specifically requested.
9. Plus signs are understood and need *not* be typed. However, you *must type in minus signs where* applicable.

This may look like a large amount of rules. They'll come easy once you've started. What it all boils down to is that we have simplified your typing as much as possible. All you have to do is type your answer and hit the EOB--- No capitals, no spaces, no punctuation. Simple, eh??

GOOD LUCK!

APPENDIX F

Flow Charts
of
Programmed Instruction Course
in
Arithmetic and Geometric Progressions

GENERAL PROGRAM FLOW CHART

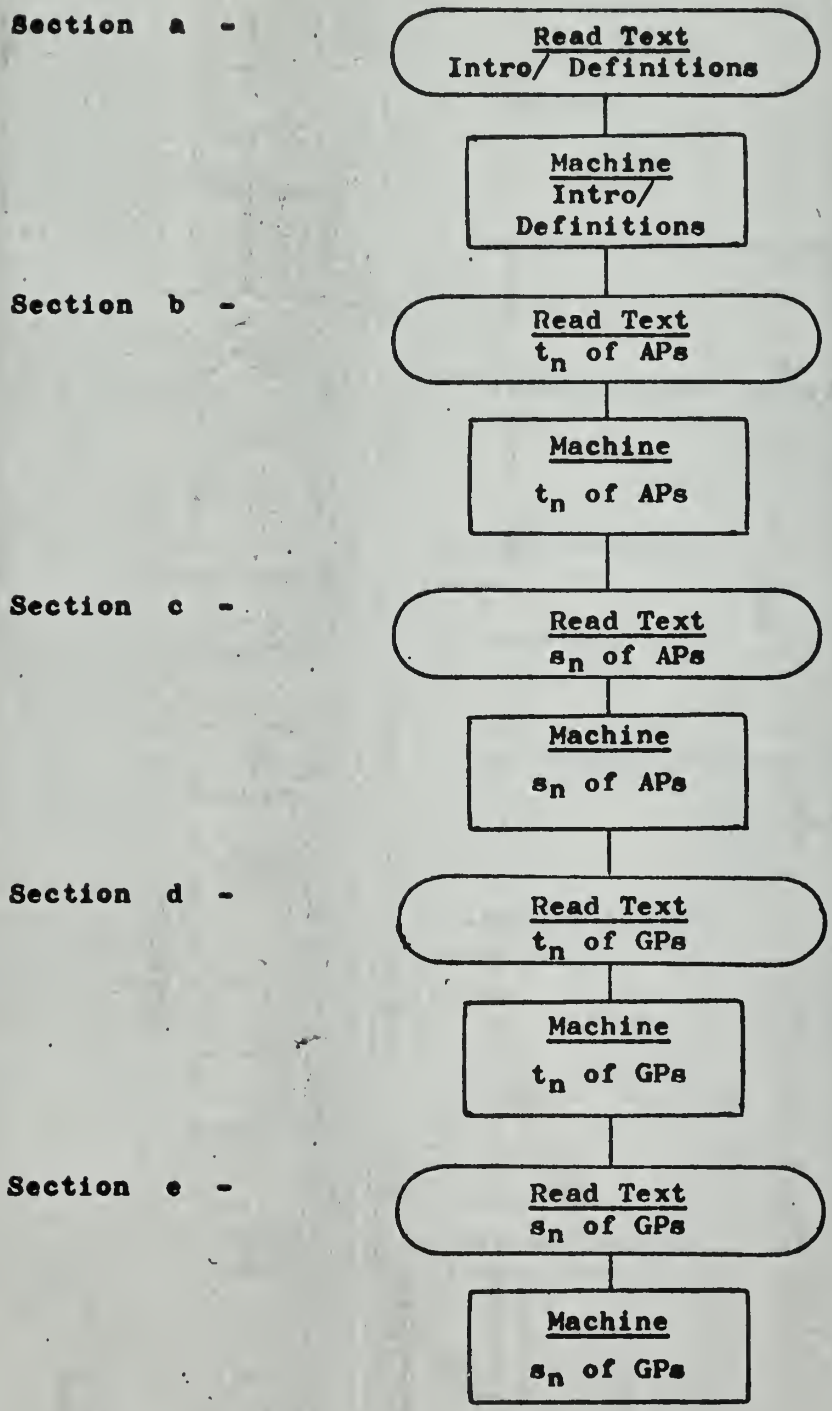
Section a -
Read Text
Intro/ Definitions
Machine
Intro/ Definitions
Section b -
Read Text
t_n of APs
Machine
t_n of APs
Section c -
Read Text
s_n of APs
Machine
s_n of APs
Section d -
Read Text
t_n of GPs
Machine
t_n of GPs
Section e -
Read Text
s_n of GPs
Machine
s_n of GPs

[illegible]

FLOW CHART SYMBOL KEY

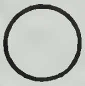

- Connector

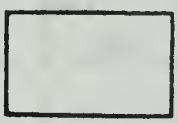

- Non-branching question(s)

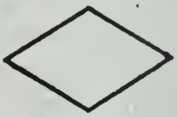

- Branching question(s)

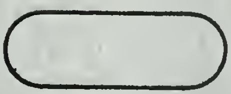

- Read statements

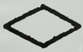

- Counter

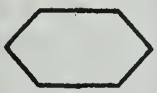

- Set counter instructions

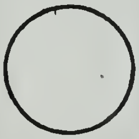

- Loop indicator

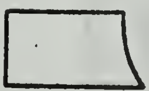

- Machine function

> - Flow
ca - Correct answer
wa - Wrong answer

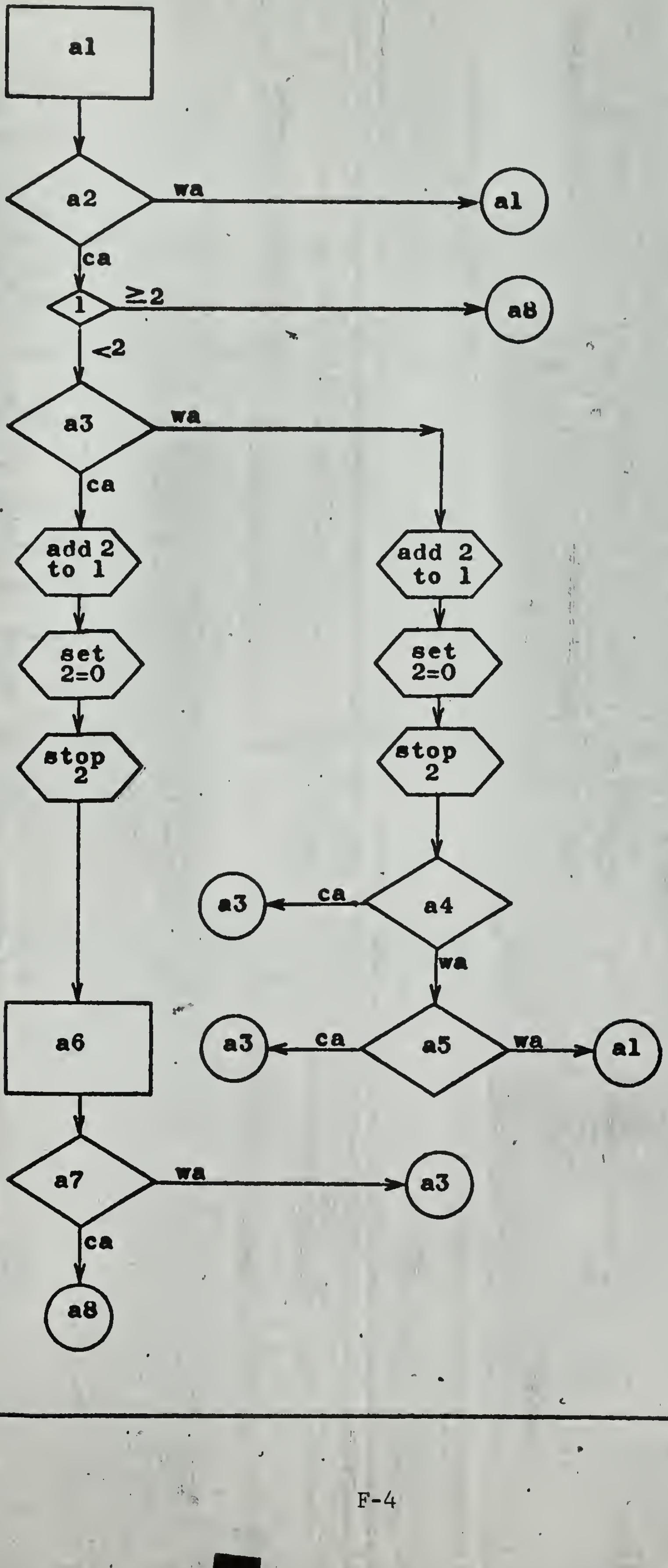
a1
a2
wa
a1
ca
1
≥2
a8
<2
a3
wa
ca
add 2 to 1
set 2=0
stop 2
add 2 to 1
set 2=0
stop 2
a3
ca
a4
wa
a6
a3
ca
a5
wa
a1
a7
wa
a3
ca
a8

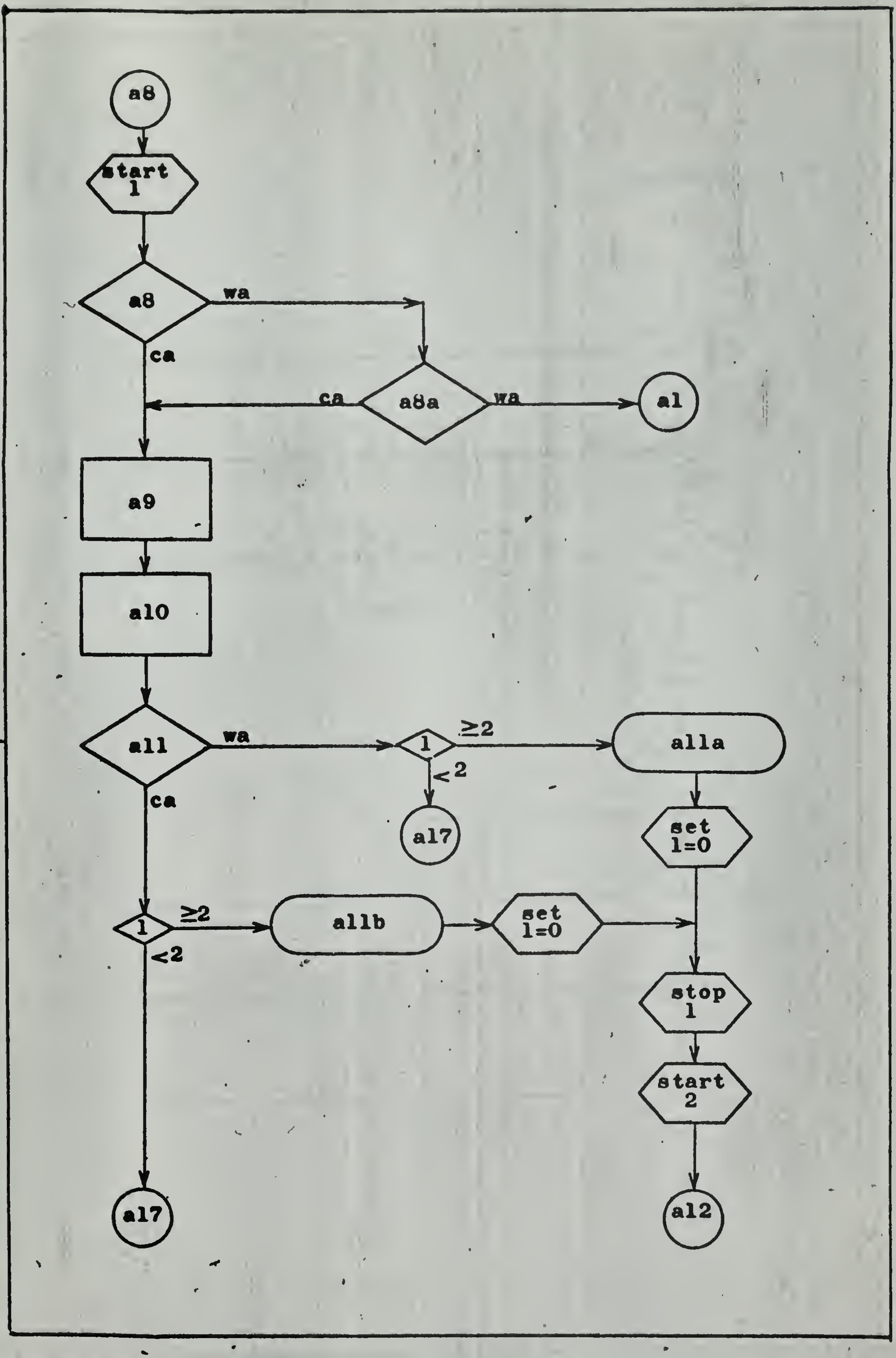
a8
start
1
a8
wa
ca
a8a
ca
wa
a1
a9
a10
a11
wa
1
≥2
<2
a11a
a17
set
1=0
ca
1
≥2
a11b
set
1=0
<2
stop
1
start
2
a17
a12

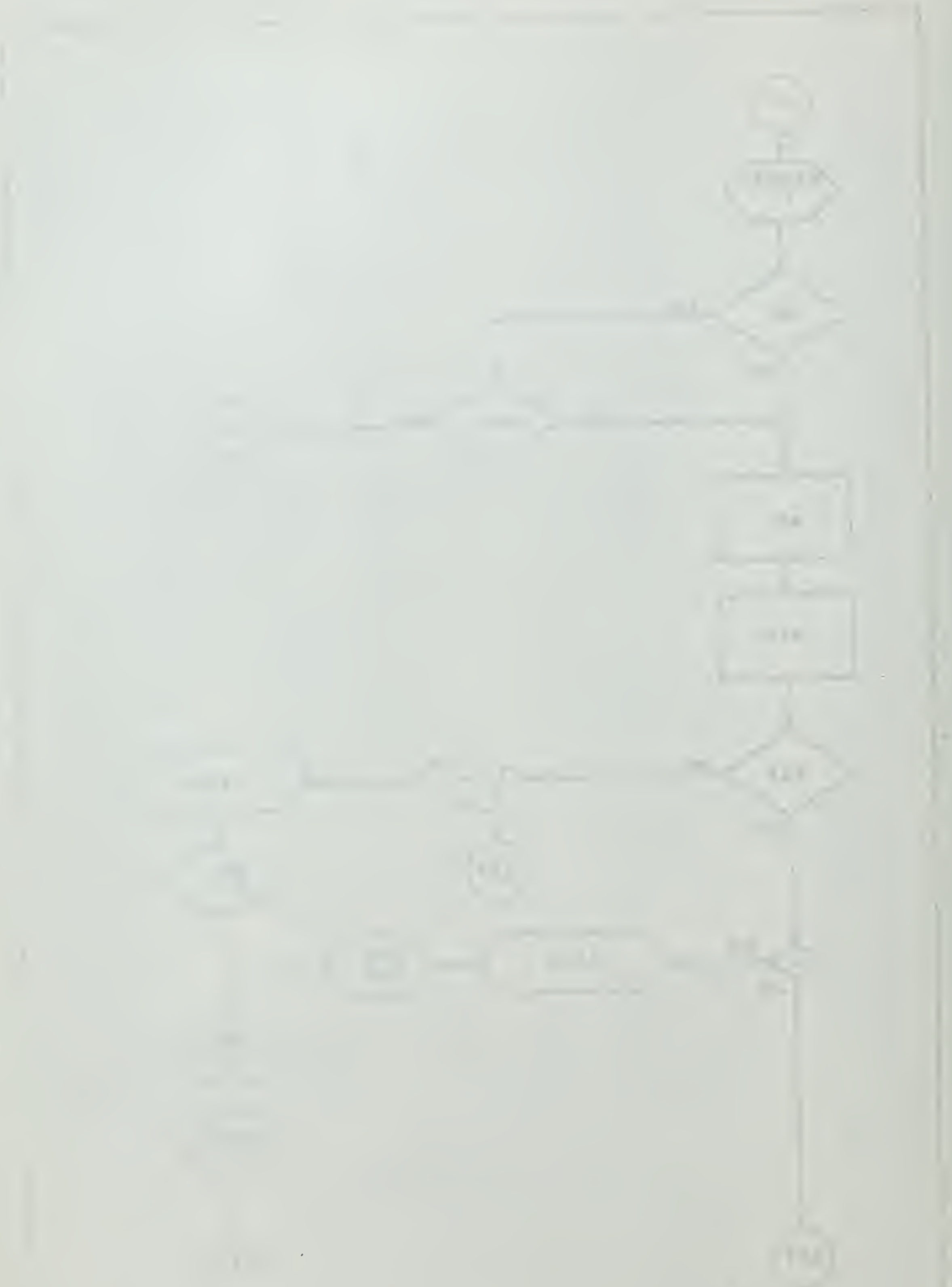

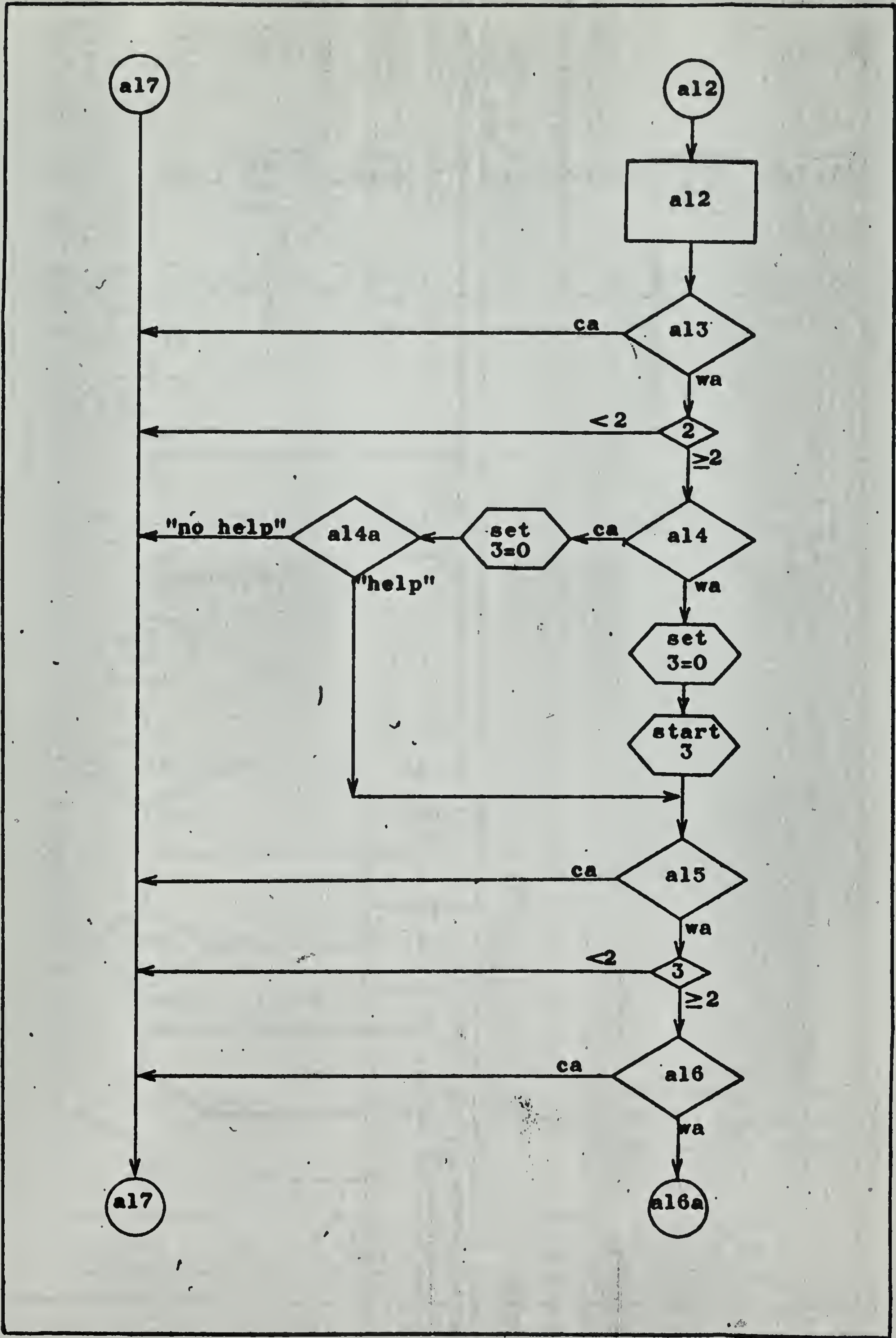
al7
al2
al2
al3
ca
wa
< 2
2
≥2
"no help"
al4a
set 3=0
ca
al4
"help"
wa
set 3=0
start 3
ca
al5
wa
<2
3
≥2
ca
al6
wa
al7
al6a

[redacted]

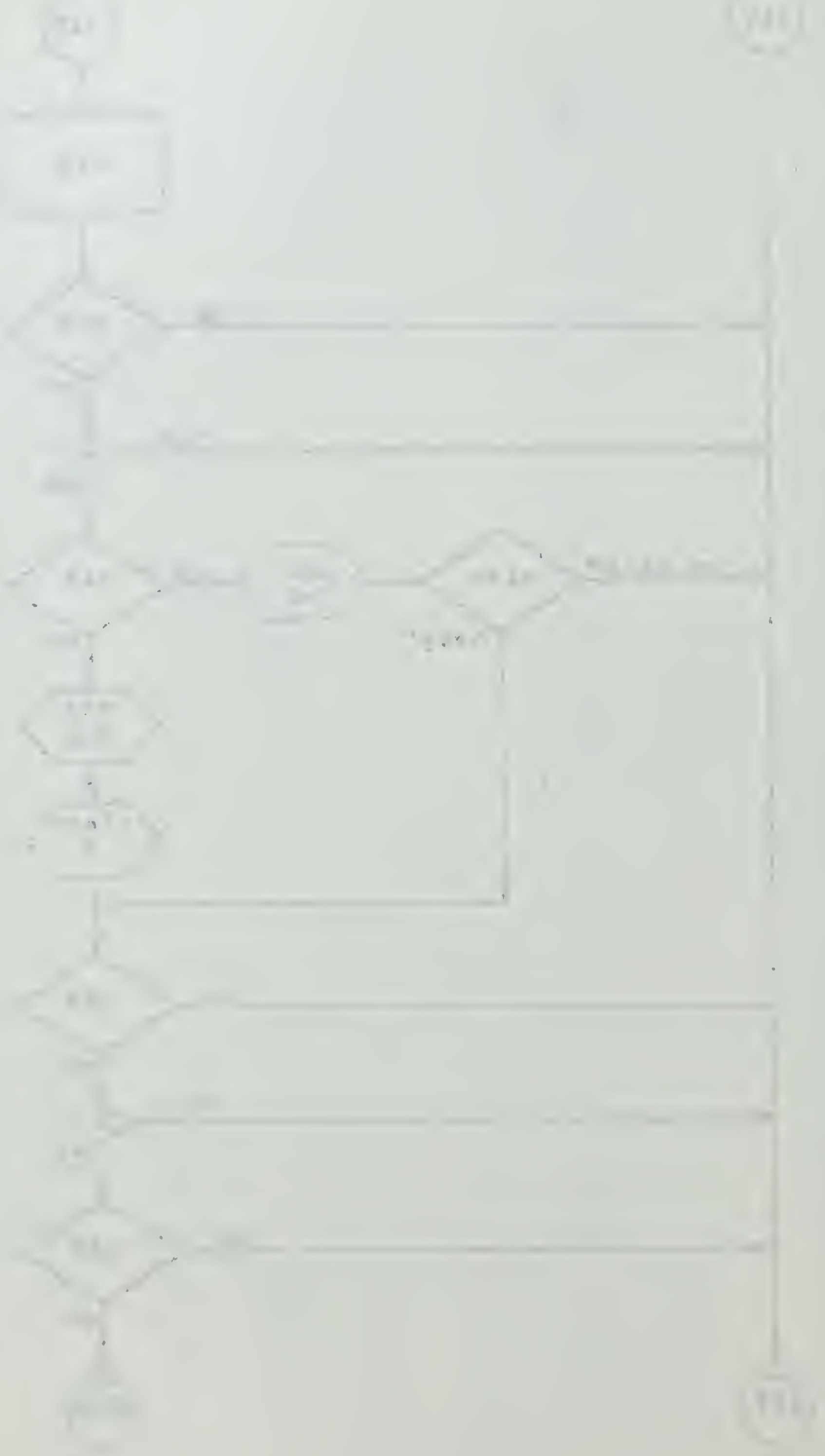
VIII

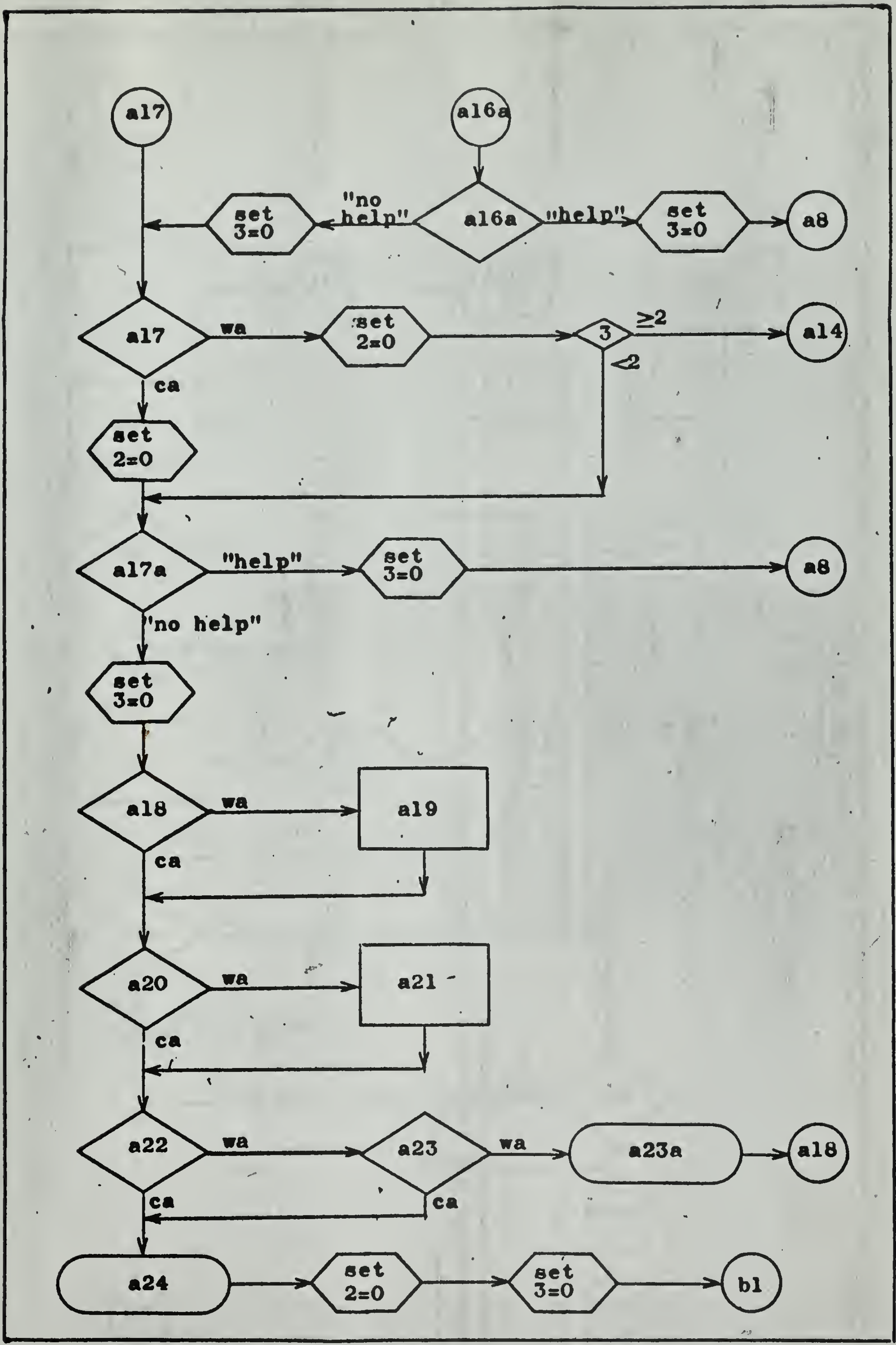
a17
a16a
a16a
"no help"
set 3=0
"help"
set 3=0
a8
a17
wa
set 2=0
3
≥2
<2
a14
ca
set 2=0
a17a
"help"
set 3=0
a8
"no help"
set 3=0
a18
wa
a19
ca
a20
wa
a21
ca
a22
wa
a23
wa
a23a
a18
ca
ca
a24
set 2=0
set 3=0
b1

[redacted]

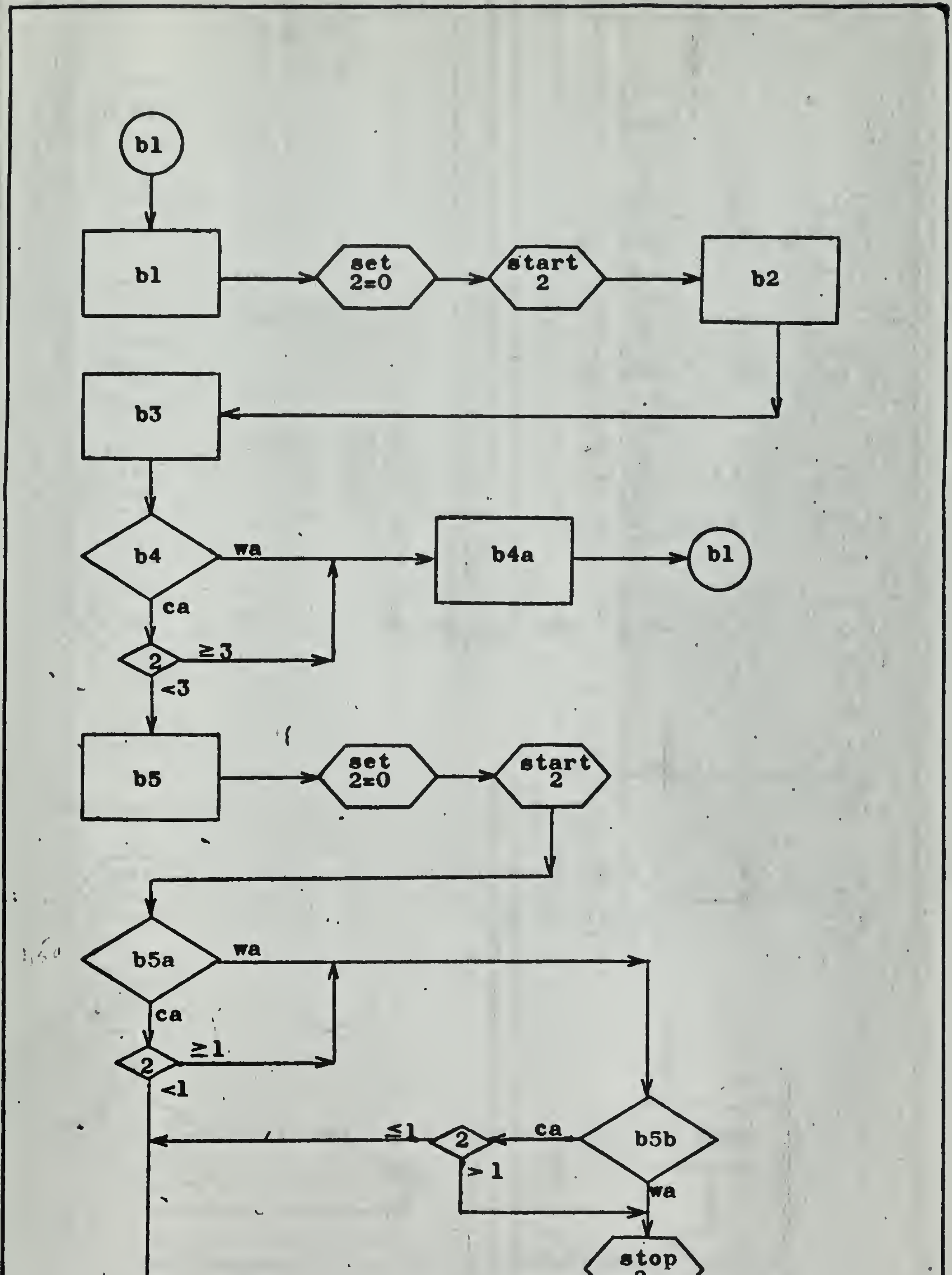
b1
b1
set
2=0
start
2
b2
b3
b4
wa
b4a
b1
ca
2
≥3
<3
b5
set
2=0
start
2
b5a
wa
ca
2
≥1
<1
≤1
2
ca
b5b
>1
wa
stop
2
b6
b5c

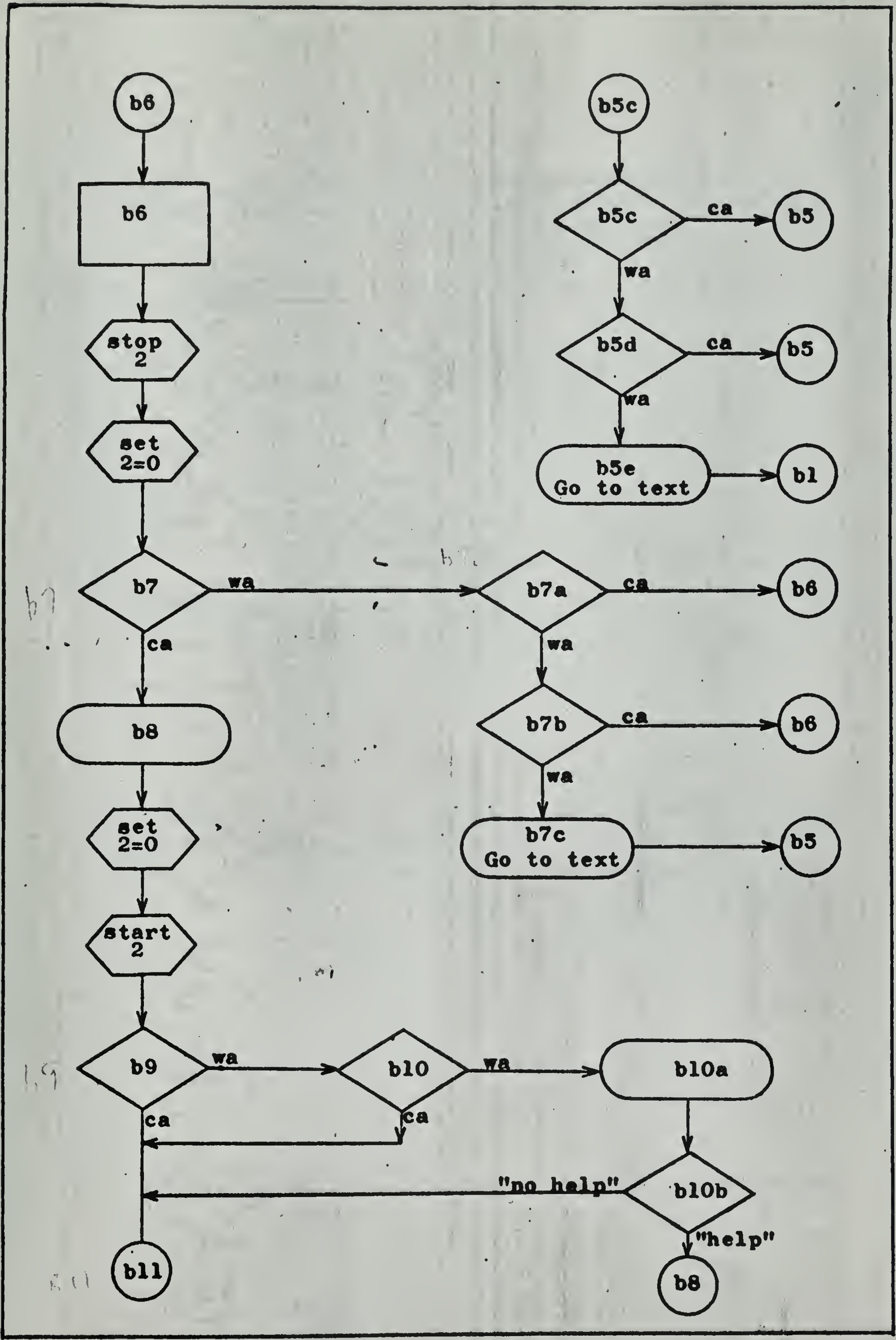
b6
b6
stop 2
set 2=0
b7
wa
ca
b8
set 2=0
start 2
b9
wa
ca
b10
wa
ca
b10a
b10b
"no help"
"help"
b11
b8
b5c
b5c
ca
b5
wa
b5d
ca
b5
wa
b5e Go to text
b1
b7a
ca
b6
wa
b7b
ca
b6
wa
b7c Go to text
b5

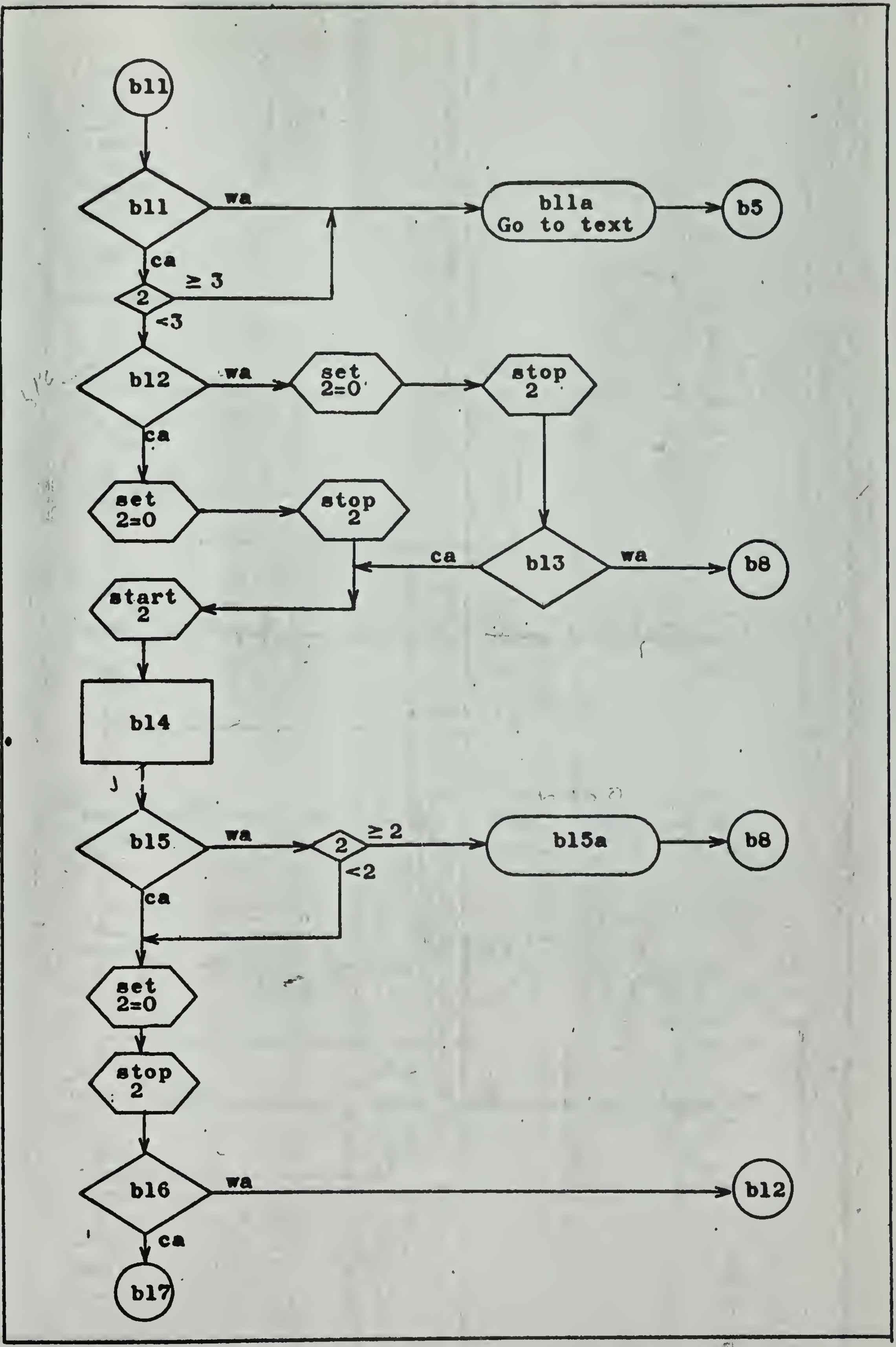
b11
b11
wa
b11a
Go to text
b5
ca
2
≥ 3
<3
b12
wa
set
2=0
stop
2
ca
set
2=0
stop
2
ca
b13
wa
b8
start
2
b14
b15
wa
2
≥ 2
b15a
b8
<2
ca
set
2=0
stop
2
b16
wa
b12
ca
b17

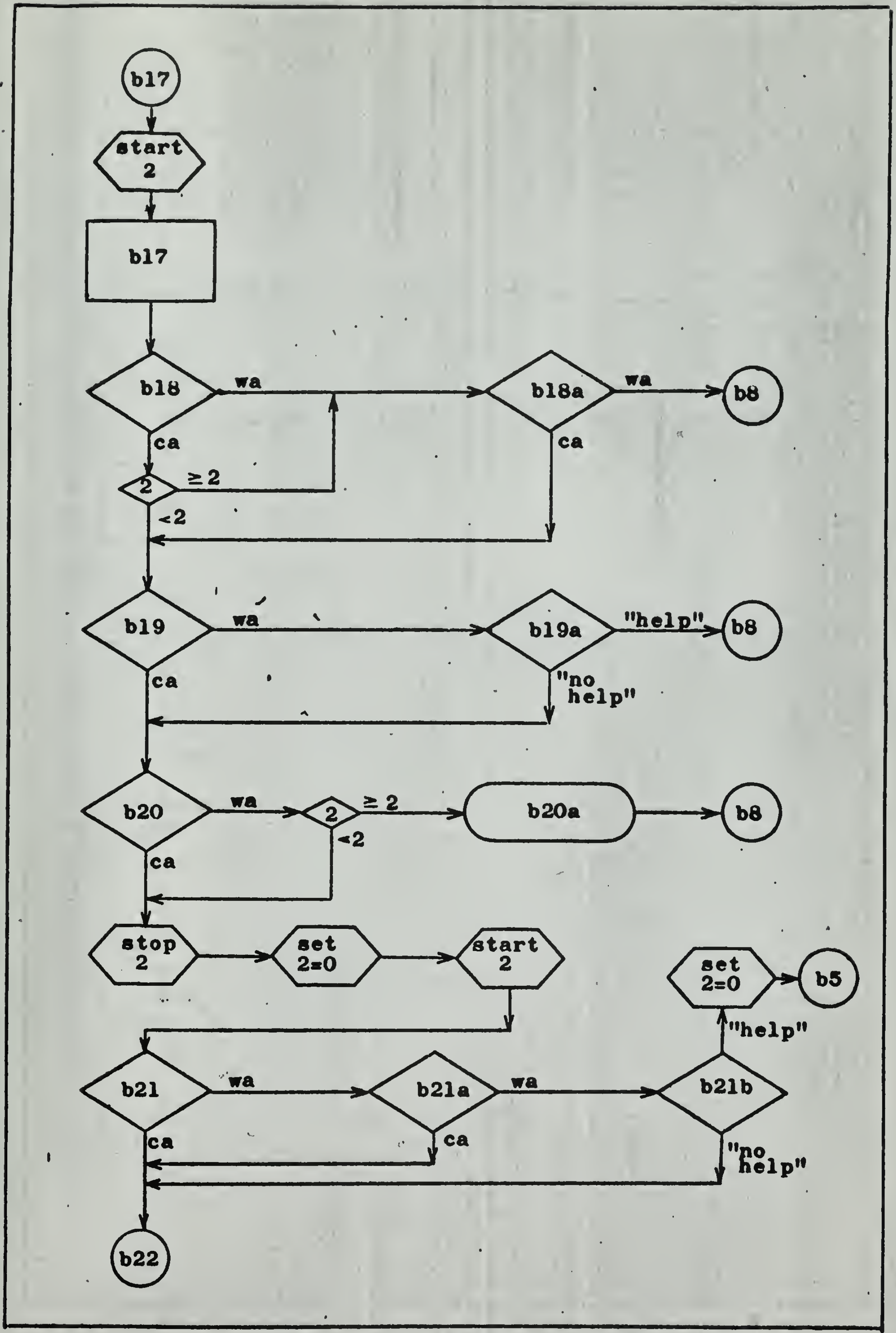
b17
start 2
b17
b18
wa
b18a
wa
b8
ca
ca
2
≥2
<2
b19
wa
b19a
"help"
b8
ca
"no help"
b20
wa
2
≥ 2
b20a
b8
<2
ca
stop 2
set 2=0
start 2
set 2=0
b5
"help"
b21
wa
b21a
wa
b21b
ca
ca
"no help"
b22

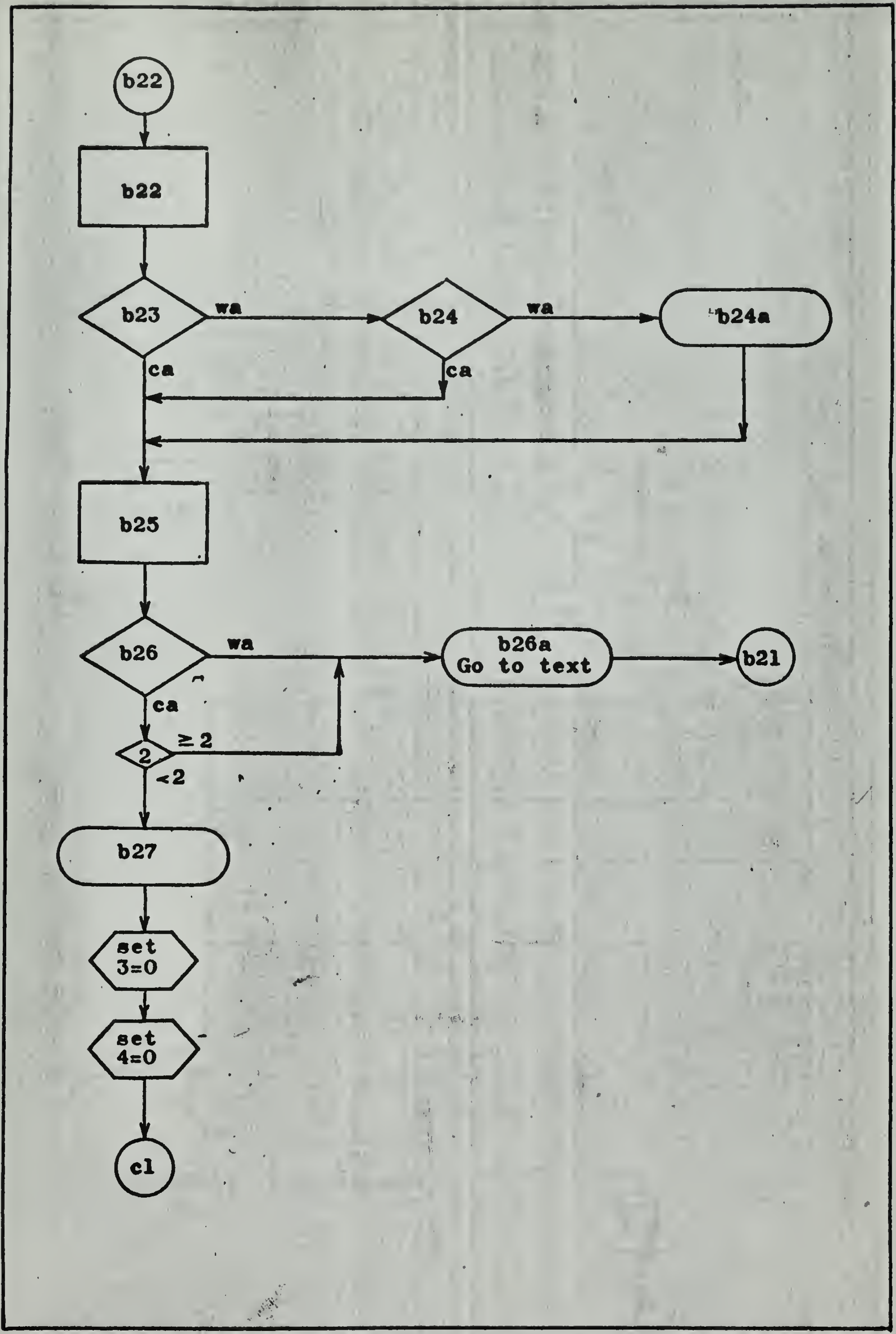
b22
b22
b23
wa
b24
wa
b24a
ca
ca
b25
b26
wa
b26a
Go to text
b21
ca
≥ 2
2
<2
b27
set
3=0
set
4=0
cl

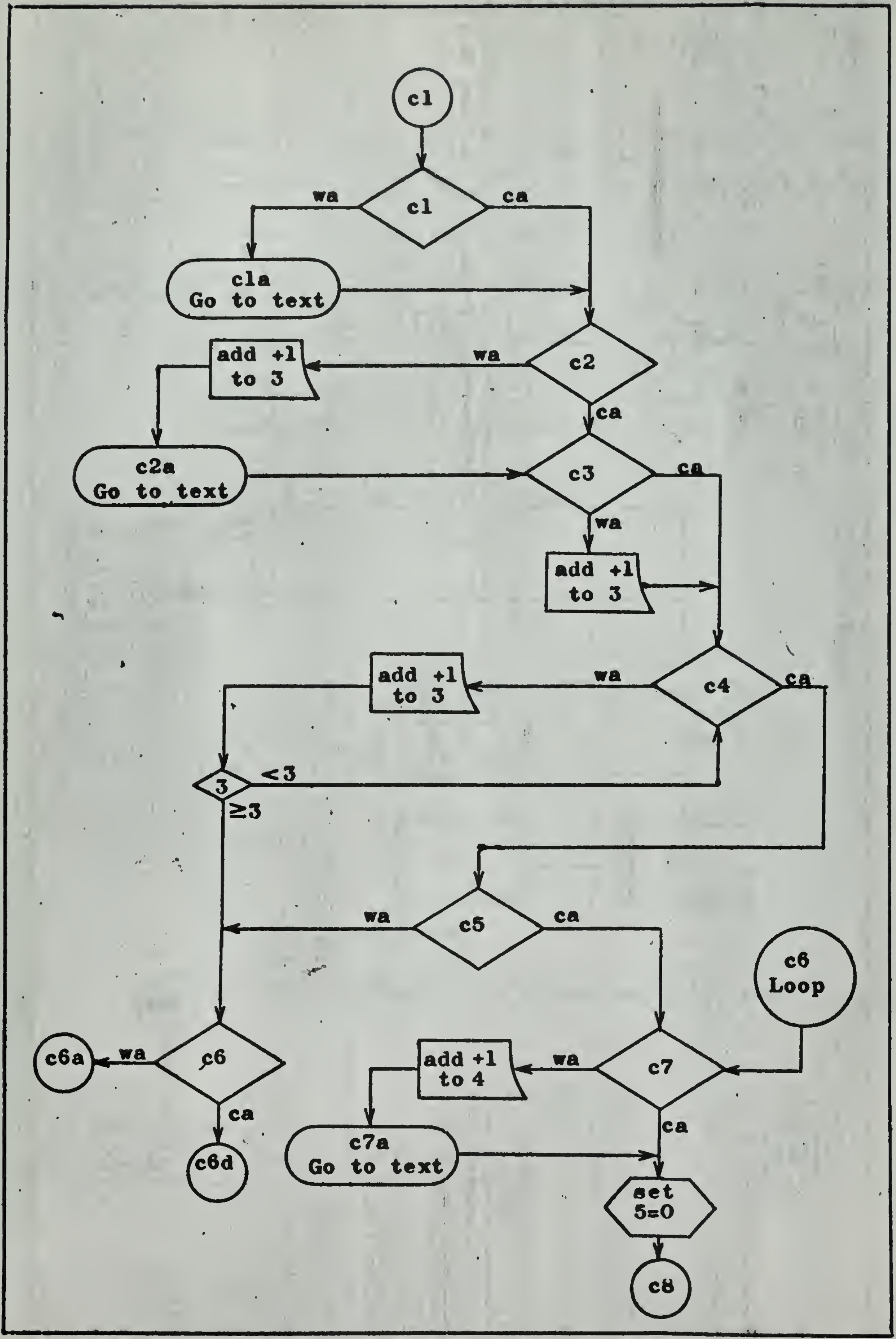
c1
c1
wa
ca
c1a
Go to text
c2
wa
add +1
to 3
ca
c2a
Go to text
c3
ca
wa
add +1
to 3
c4
wa
ca
add +1
to 3
3
<3
≥3
c5
wa
ca
c6
Loop
c6a
wa
c6
ca
c6d
c7
wa
add +1
to 4
ca
c7a
Go to text
set
5=0
c8

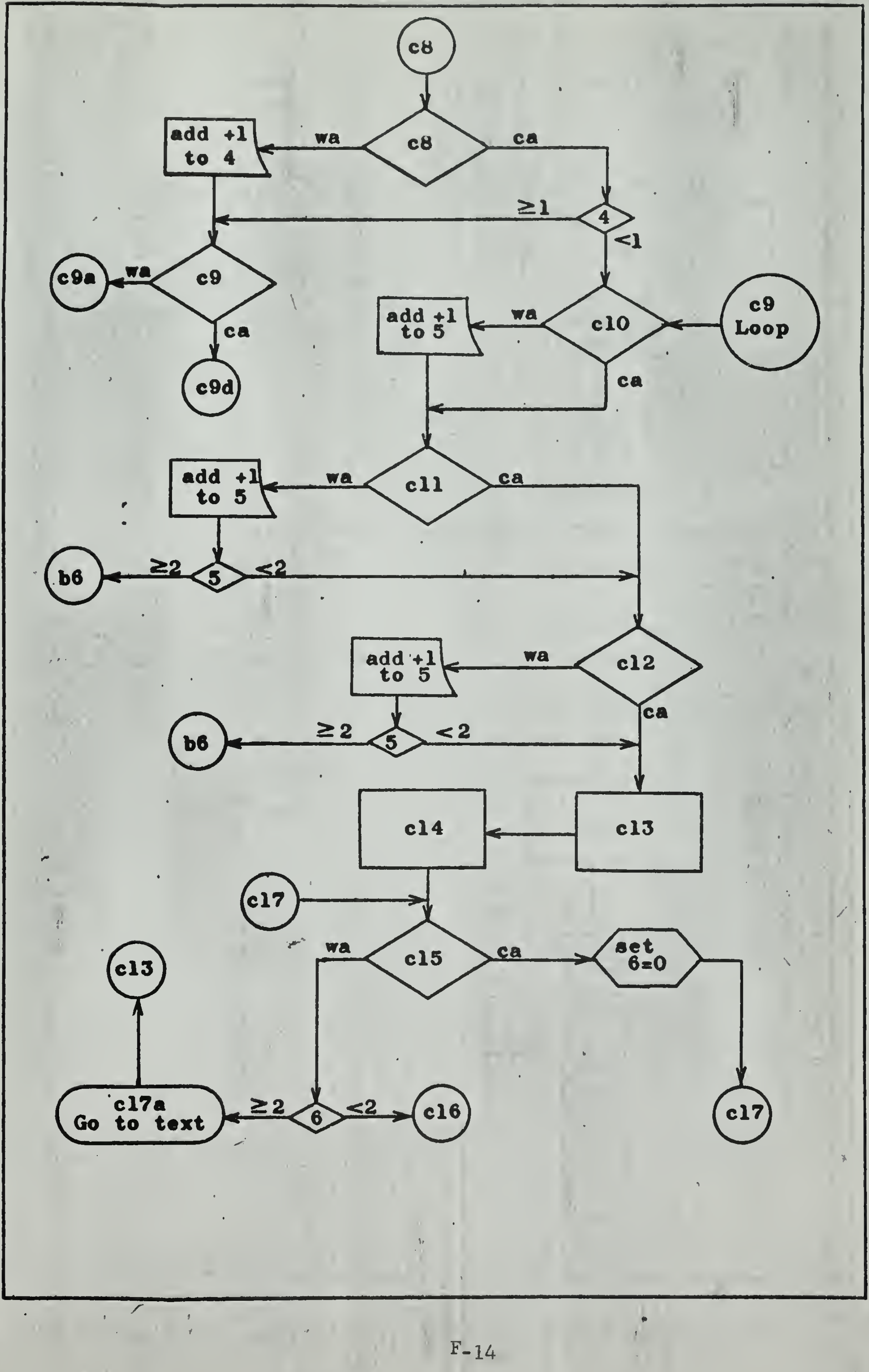
c8
add +1 to 4
wa
c8
ca
≥1
4
<1
c9a
wa
c9
ca
c9d
add +1 to 5
wa
c10
c9 Loop
ca
add +1 to 5
wa
c11
ca
b6
≥2
5
<2
add +1 to 5
wa
c12
ca
b6
≥2
5
<2
c14
c13
c17
wa
c15
ca
set 6=0
c13
c17a Go to text
≥2
6
<2
c16
c17

[redacted]

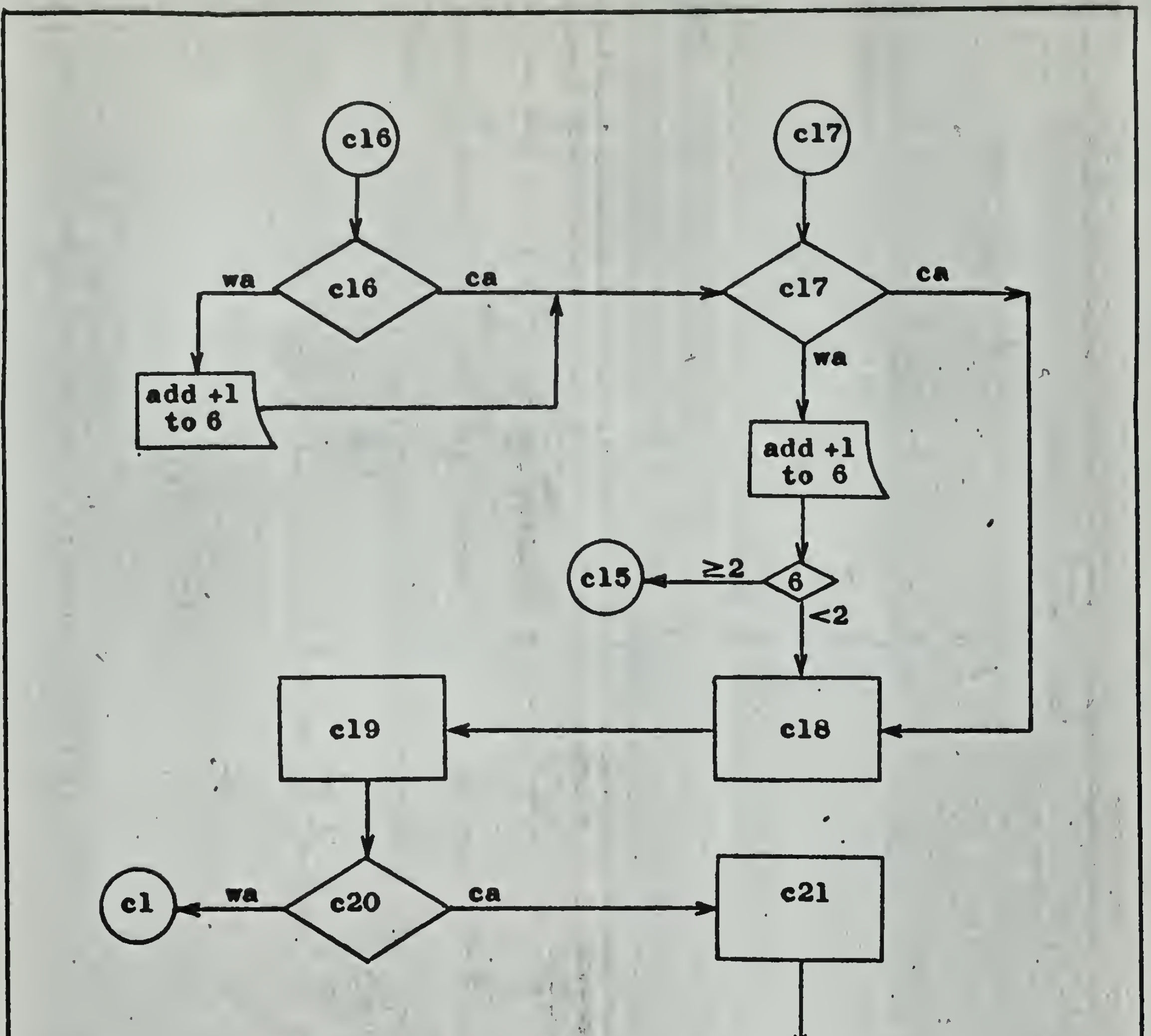
c16
c17
wa
c16
ca
c17
ca
wa
add +1 to 6
add +1 to 6
c15
≥2
6
<2
c19
c18
c1
wa
c20
ca
c21
c22
set 3,4, 5,6=0
d1

c6 LOOP

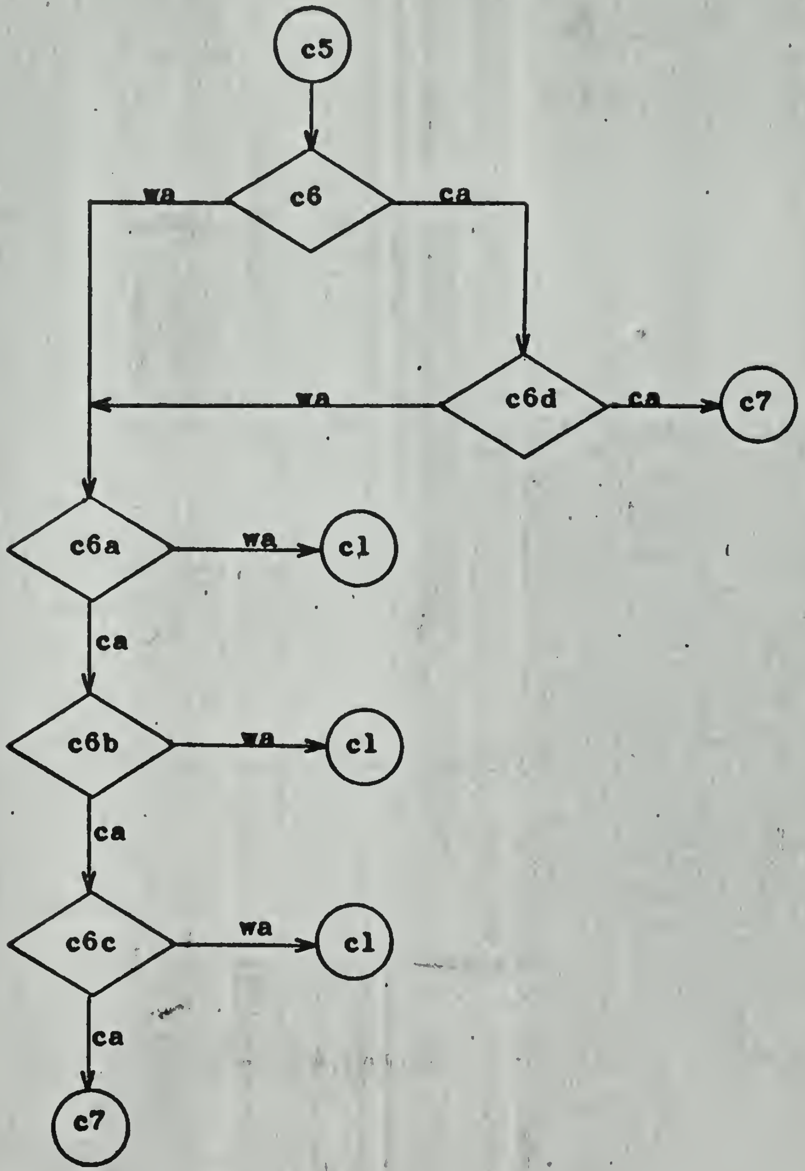
c5
c6
wa
ca
c6d
wa
ca
c7
c6a
wa
c1
ca
c6b
wa
c1
ca
c6c
wa
c1
ca
c7

c9 LOOP

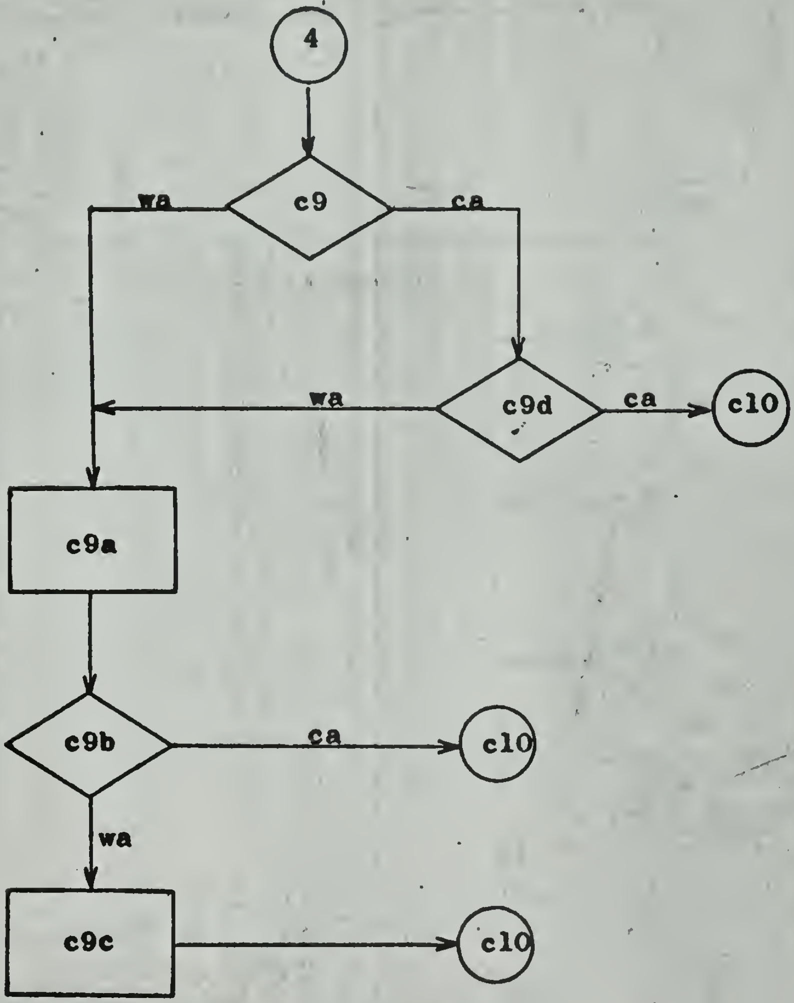
4
c9
wa
ca
c9d
wa
ca
c10
c9a
c9b
ca
c10
wa
c9c
c10

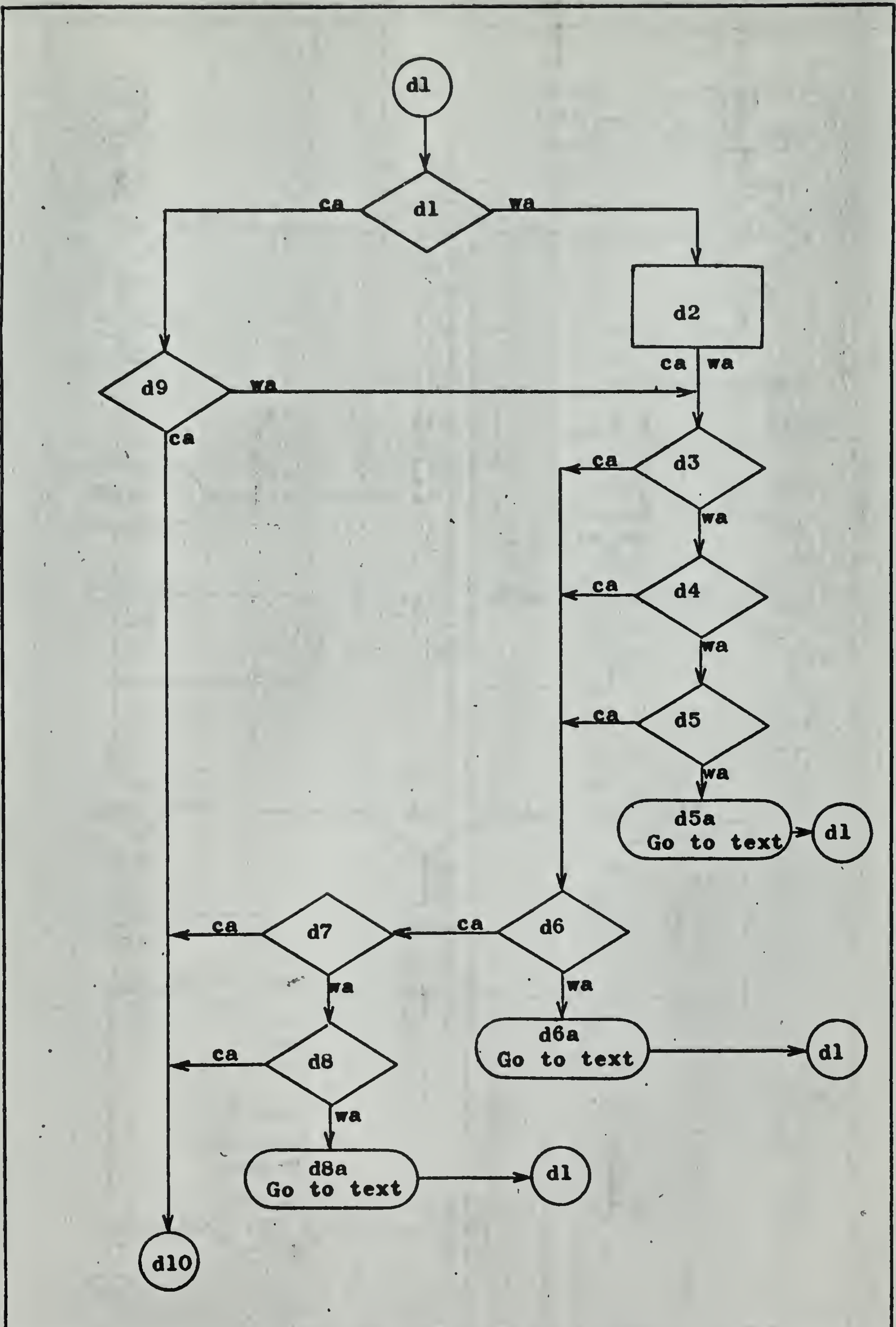
d1
d1
ca
wa
d2
ca
wa
d9
wa
ca
d3
ca
wa
d4
ca
wa
d5
ca
wa
d5a
Go to text
d1
d6
ca
wa
d7
ca
wa
d6a
Go to text
d1
d8
ca
wa
d8a
Go to text
d1
d10

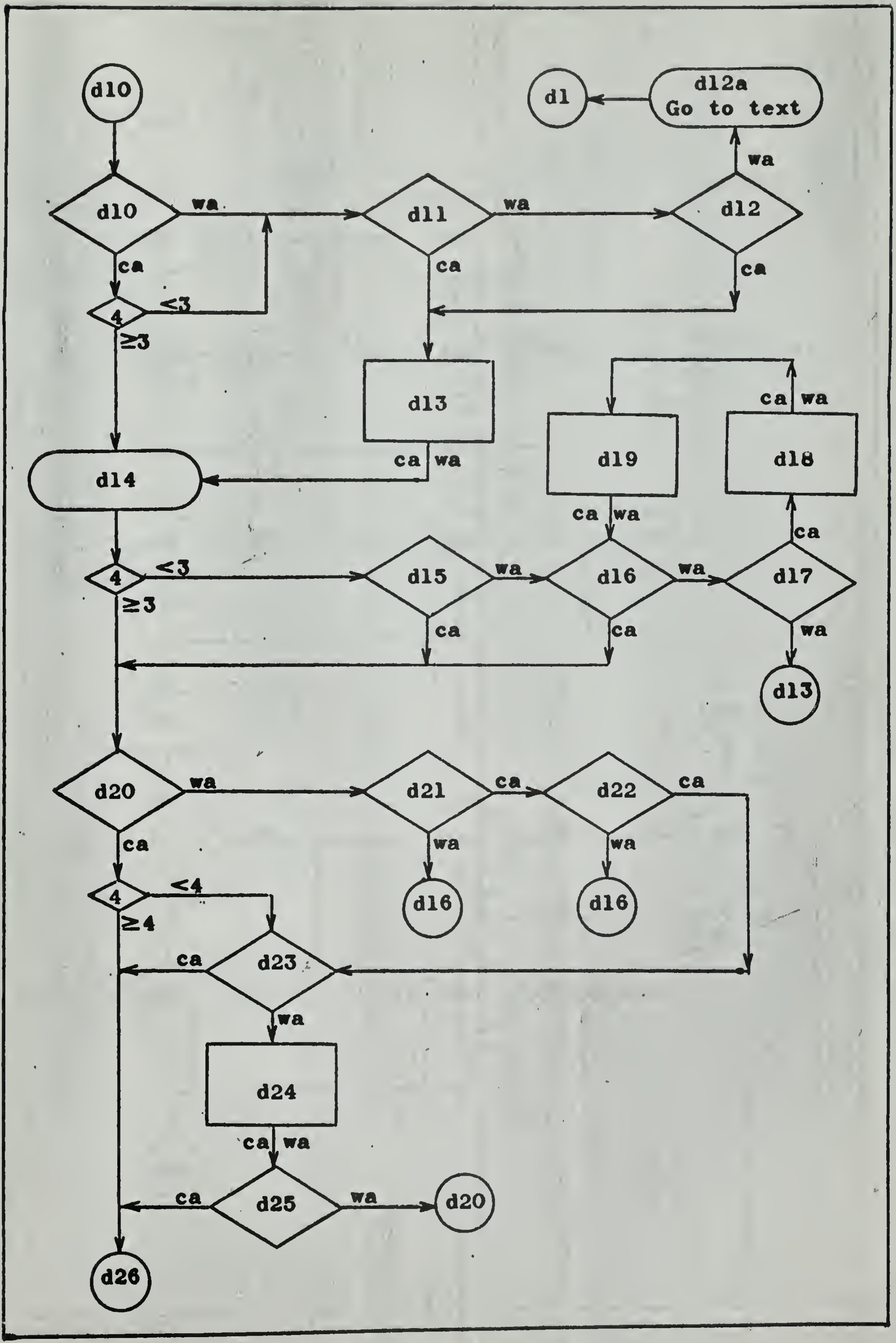
d10
d1
d12a
Go to text
wa
d10
wa
d11
wa
d12
ca
ca
ca
4
<3
≥3
d13
ca
wa
ca
wa
d19
d18
d14
ca
wa
ca
4
<3
d15
wa
d16
wa
d17
≥3
ca
ca
wa
d13
d20
wa
d21
ca
d22
ca
ca
wa
wa
4
<4
d16
d16
≥4
ca
d23
wa
d24
ca
wa
ca
d25
wa
d20
d26

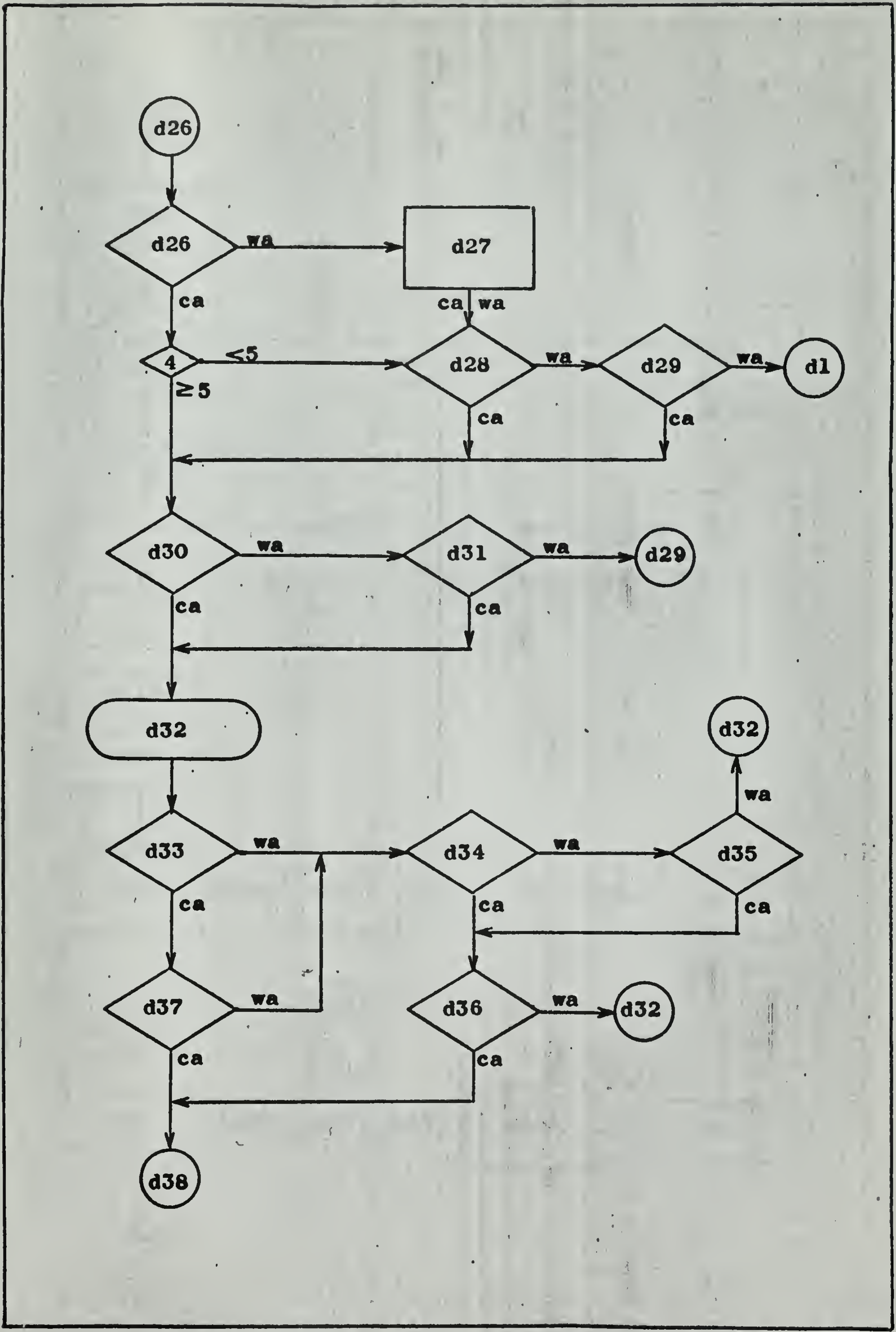
d26
d26
wa
d27
ca
ca
wa
4
<5
≥5
d28
wa
d29
wa
d1
ca
ca
d30
wa
d31
wa
d29
ca
ca
d32
d32
wa
d33
wa
d34
wa
d35
ca
ca
ca
d37
wa
d36
wa
d32
ca
ca
d38

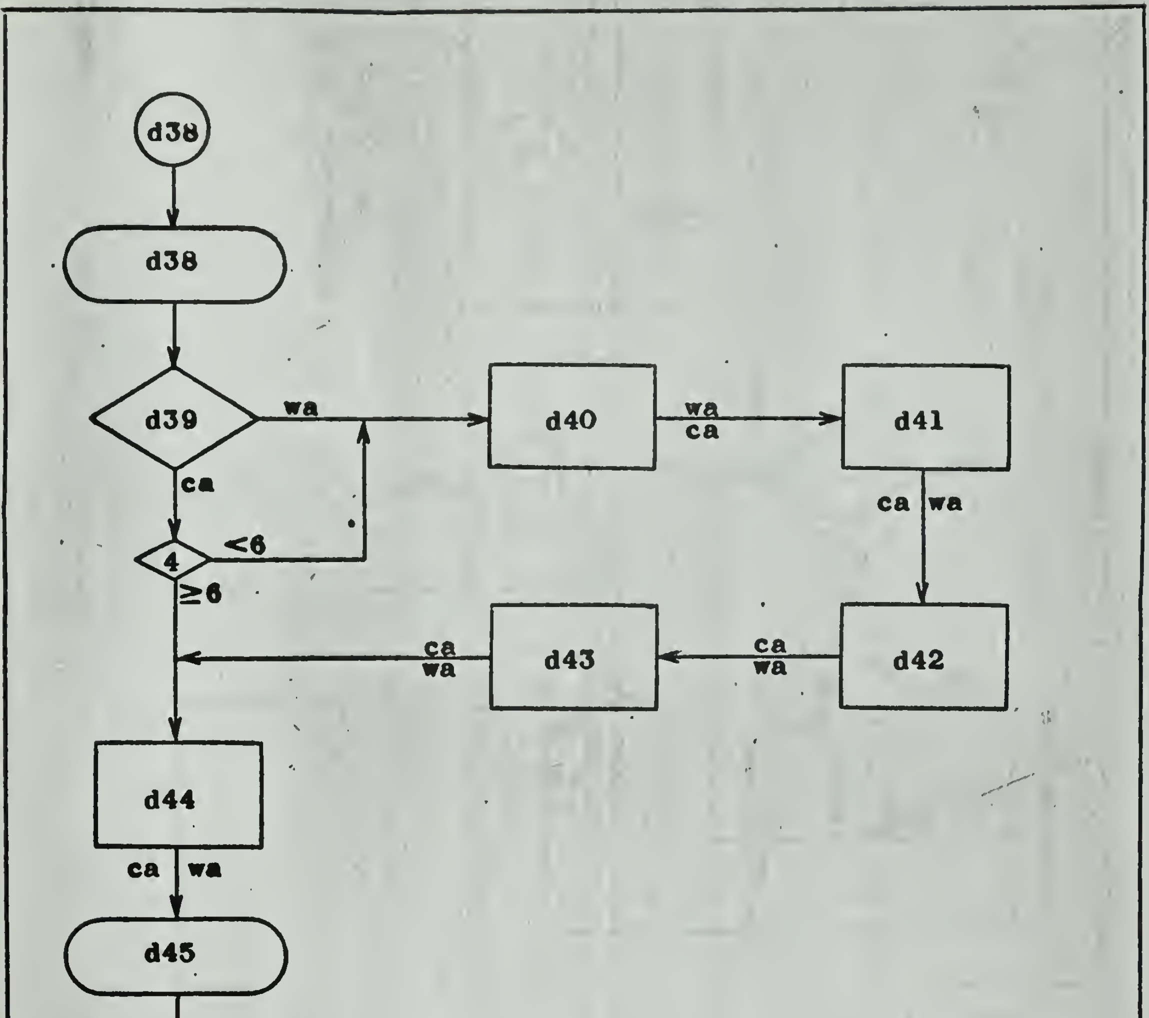

d38
d38
d39
wa
ca
4
<6
≥6
d40
wa
ca
d41
ca
wa
d42
ca
wa
d43
ca
wa
d44
ca
wa
d45
d46
ca
wa
d47
ca
wa
d48
ca
wa
d49
ca
wa
d50
d51
ca
wa
d52
wa
d40
ca
d53
el

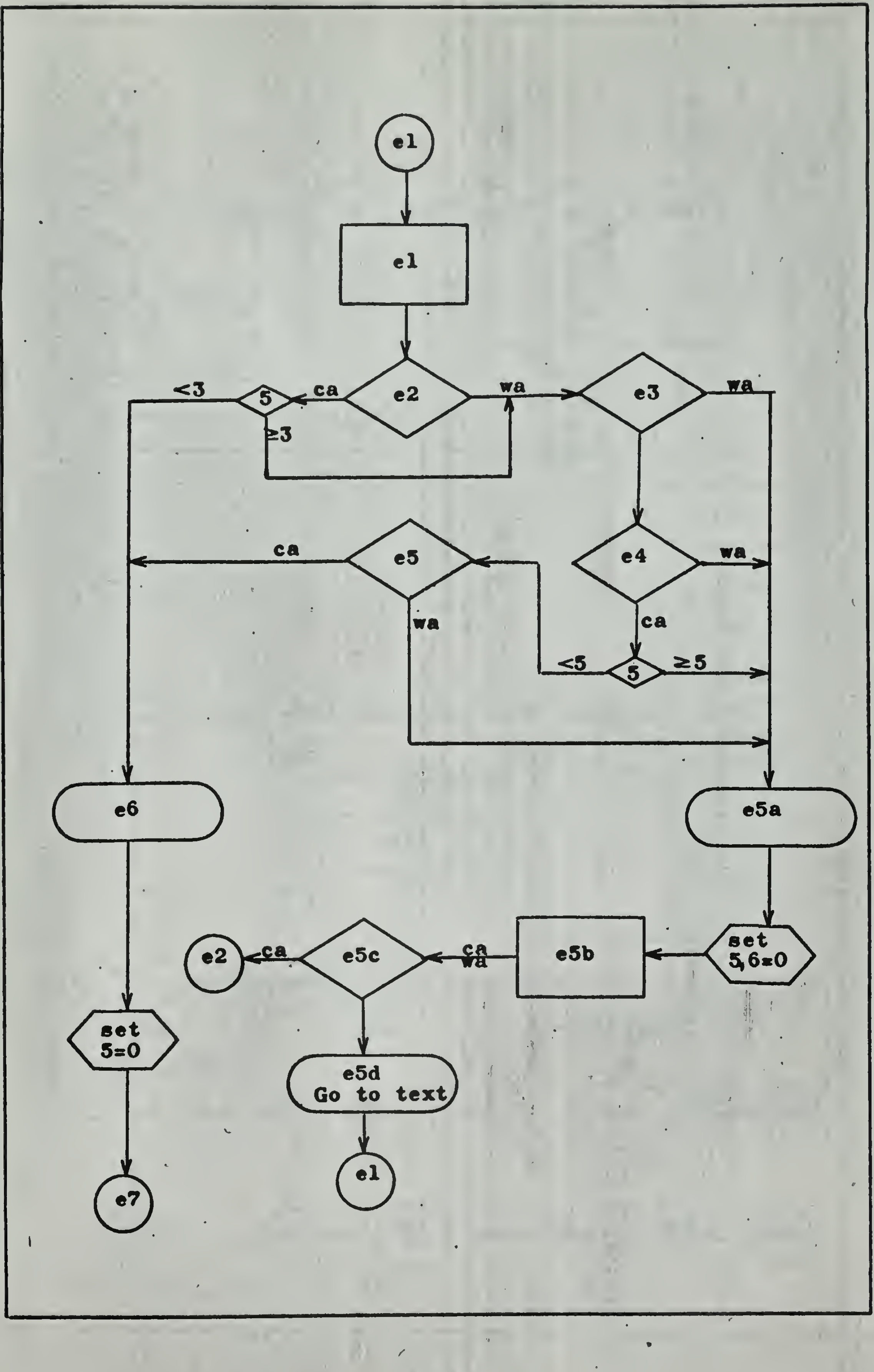
e1
e1
e2
ca
wa
5
<3
≥3
e3
wa
e4
wa
ca
5
<5
≥5
e5
ca
wa
e6
e5a
set 5,6=0
e5b
ca wa
e5c
ca
e2
e5d Go to text
e1
set 5=0
e7

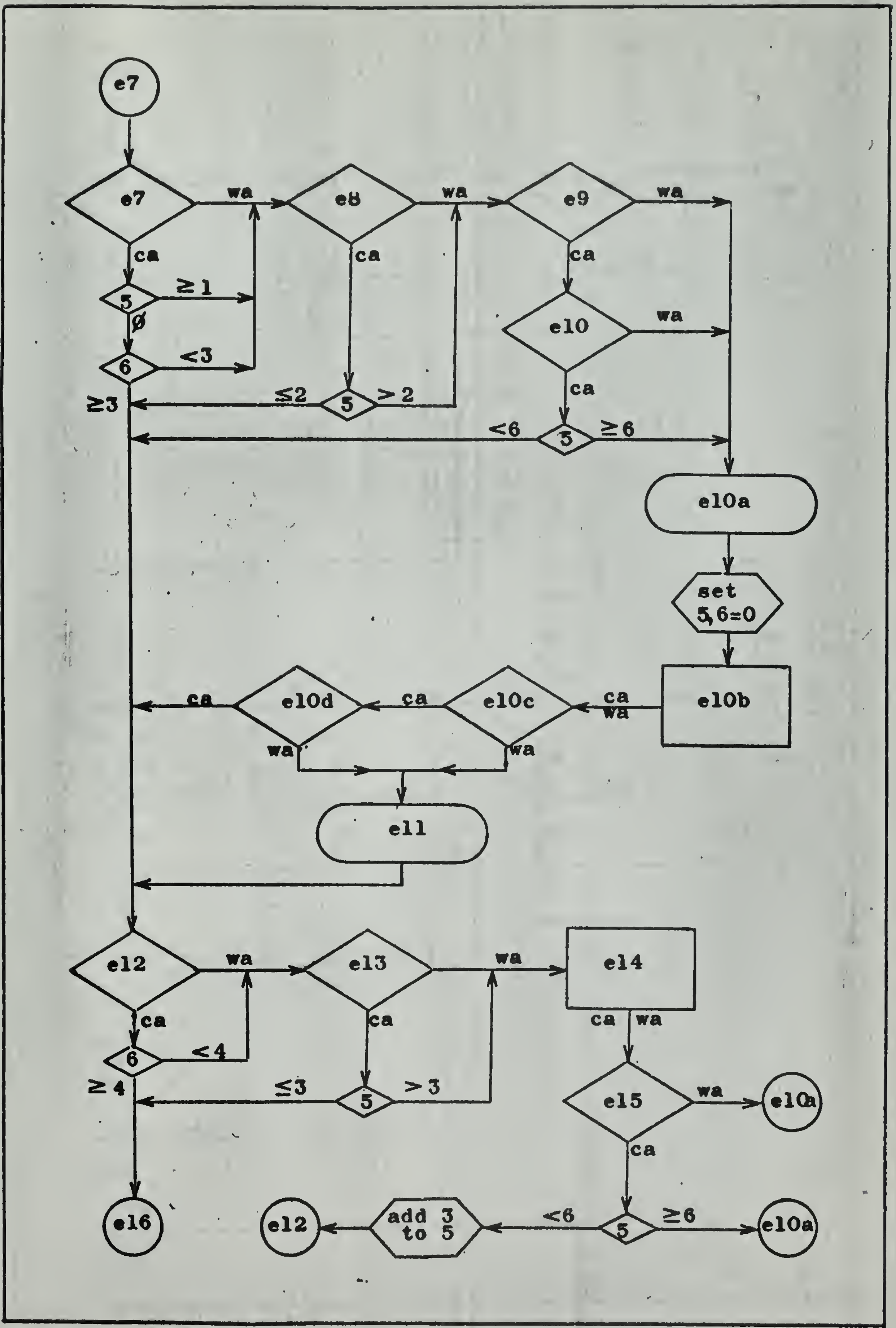
e7
e7
wa
ca
5
≥1
Ø
6
<3
≥3
e8
wa
ca
≤2
5
>2
e9
wa
ca
e10
wa
ca
<6
5
≥6
e10a
set
5,6=0
e10b
ca
wa
e10c
ca
wa
e10d
ca
wa
e11
e12
wa
ca
6
<4
≥4
e13
wa
ca
≤3
5
>3
e14
ca
wa
e15
wa
e10a
ca
<6
5
≥6
e10a
add 3
to 5
e12
e16

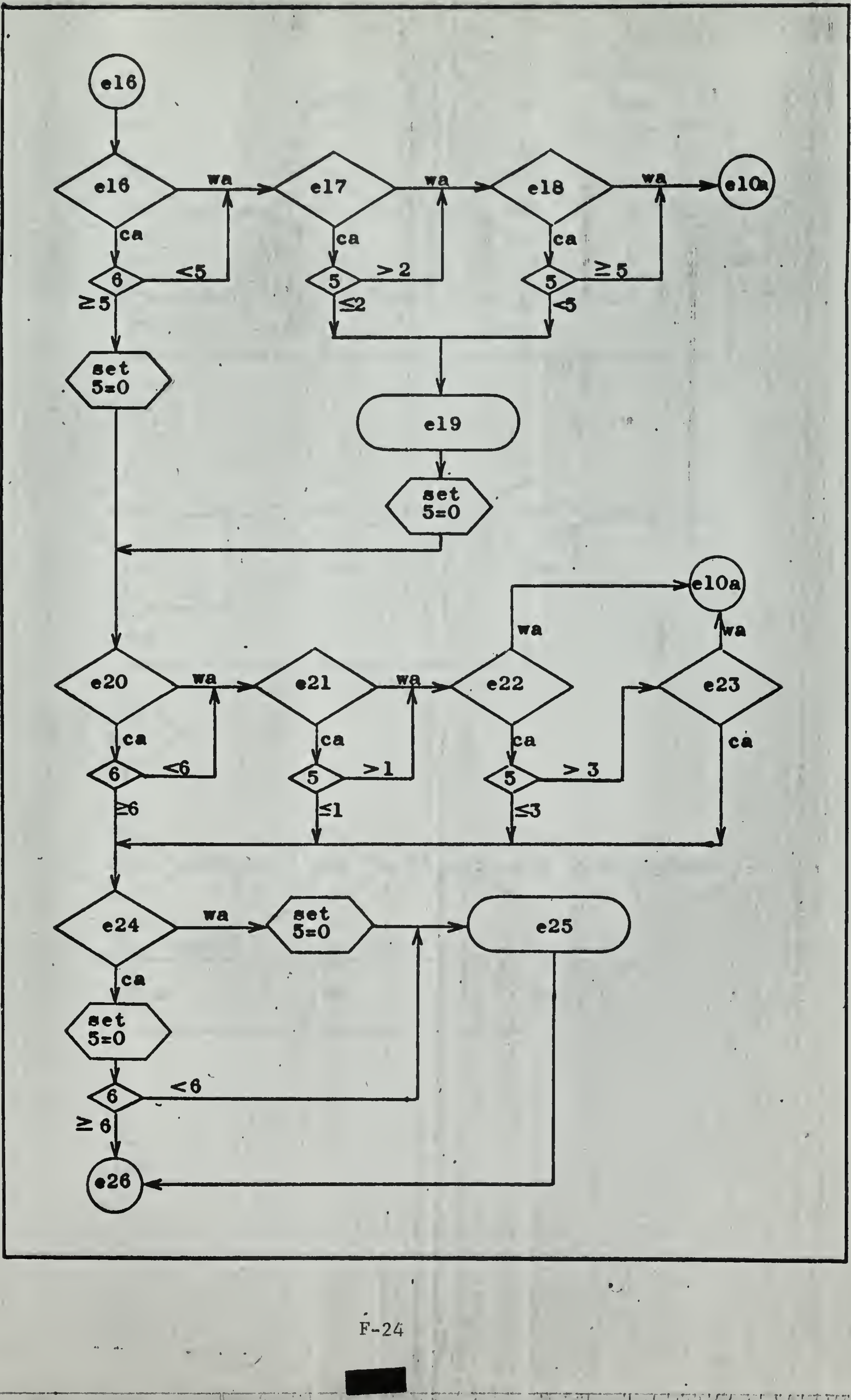
e16
e16
wa
ca
6
<5
≥5
set 5=0
e17
wa
ca
5
>2
≤2
e18
wa
ca
5
≥5
<5
e10a
e19
set 5=0
e10a
wa
e20
wa
ca
6
<6
≥6
e21
wa
ca
5
>1
≤1
e22
ca
5
> 3
≤3
e23
wa
ca
e24
wa
set 5=0
e25
ca
set 5=0
6
<6
≥ 6
e26

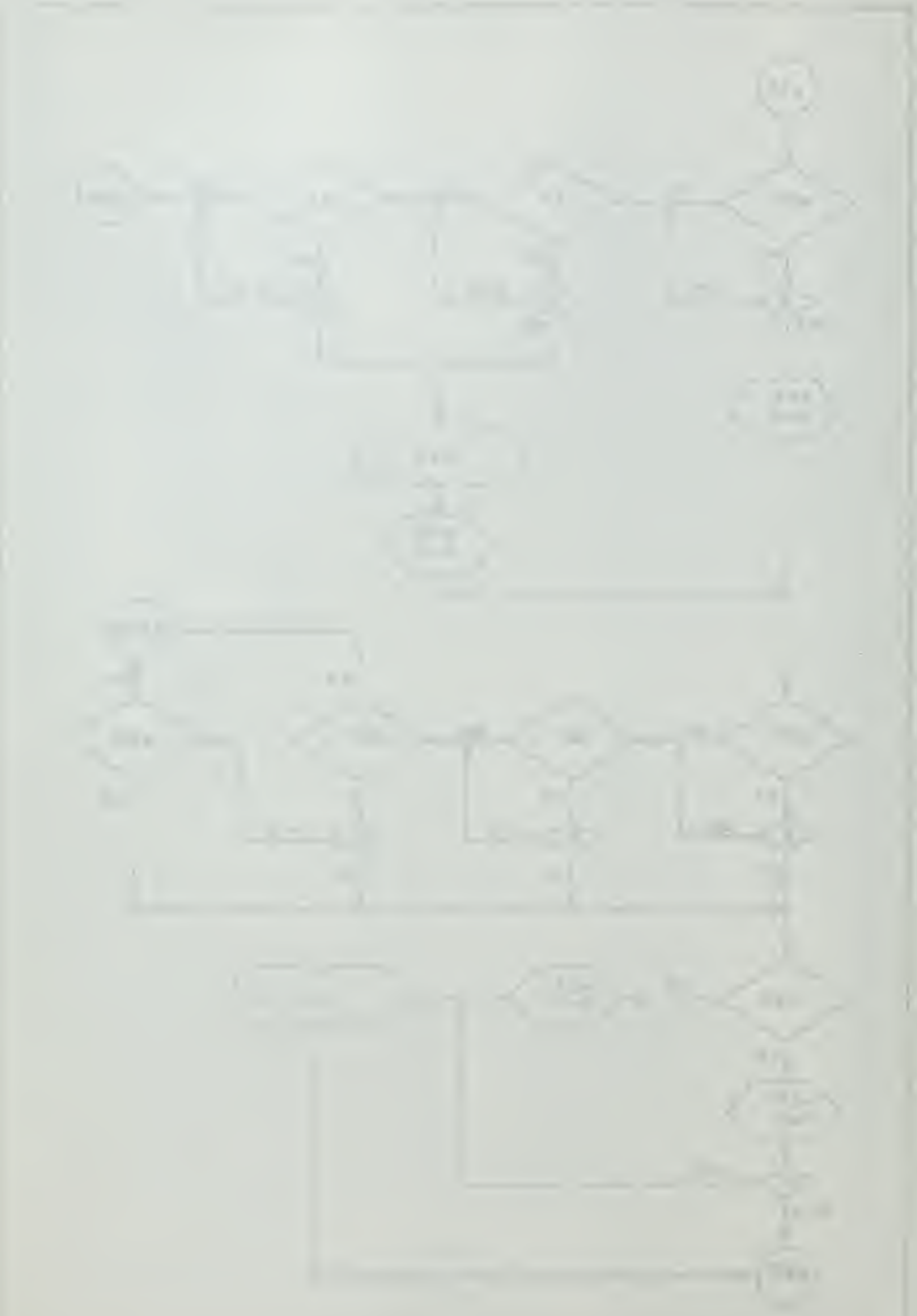

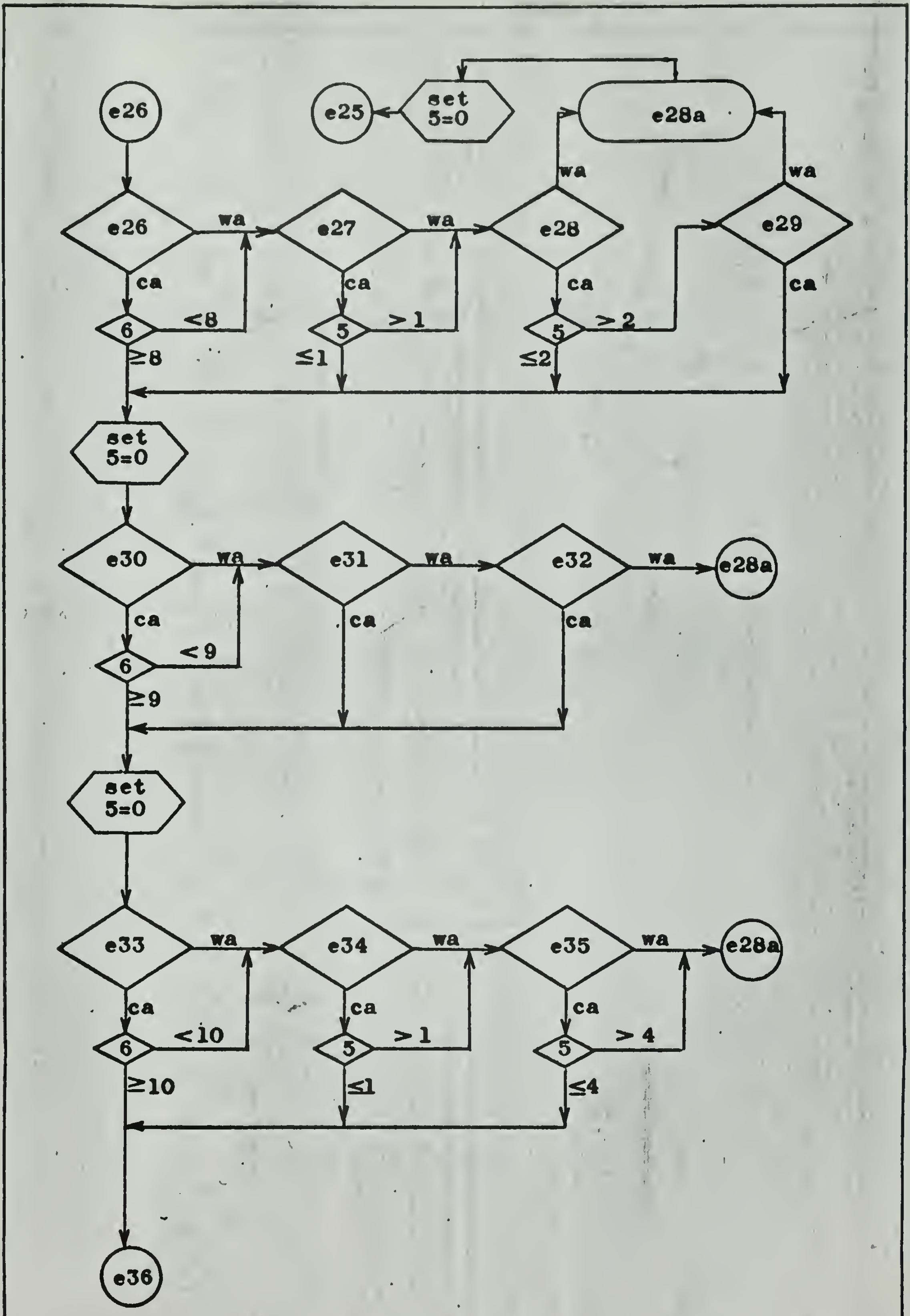
e26
set
5=0
e25
e28a
e26
wa
e27
wa
e28
wa
e29
wa
ca
6
<8
≥8
ca
5
>1
≤1
ca
5
>2
≤2
ca
set
5=0
e30
wa
e31
wa
e32
wa
e28a
ca
6
<9
≥9
ca
ca
set
5=0
e33
wa
e34
wa
e35
wa
e28a
ca
6
<10
≥10
ca
5
>1
≤1
ca
5
>4
≤4
e36

[redacted]

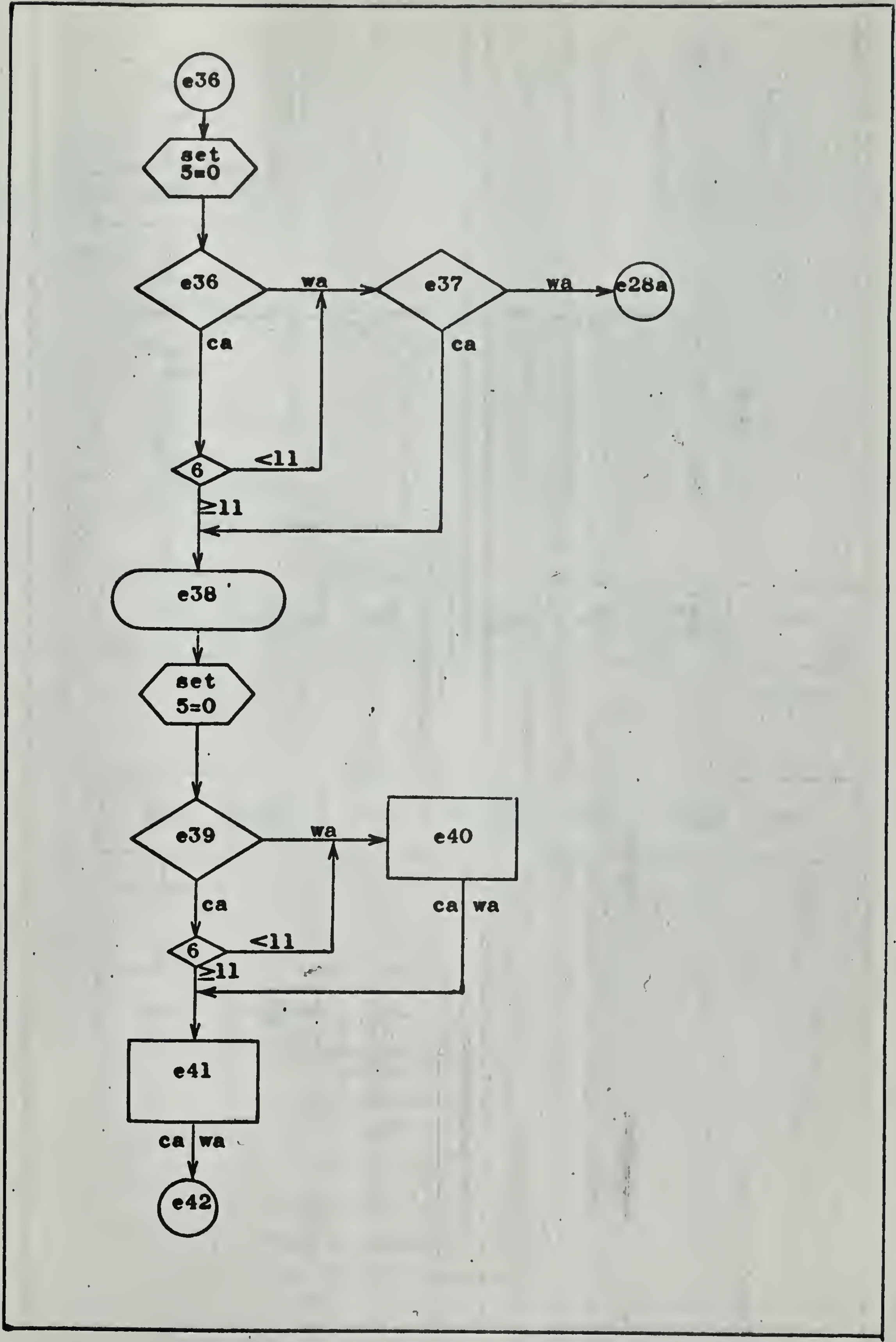
e36
set
5=0
e36
wa
e37
wa
e28a
ca
ca
6
<11
≥11
e38
set
5=0
e39
wa
e40
ca
ca
wa
6
<11
≥11
e41
ca
wa
e42

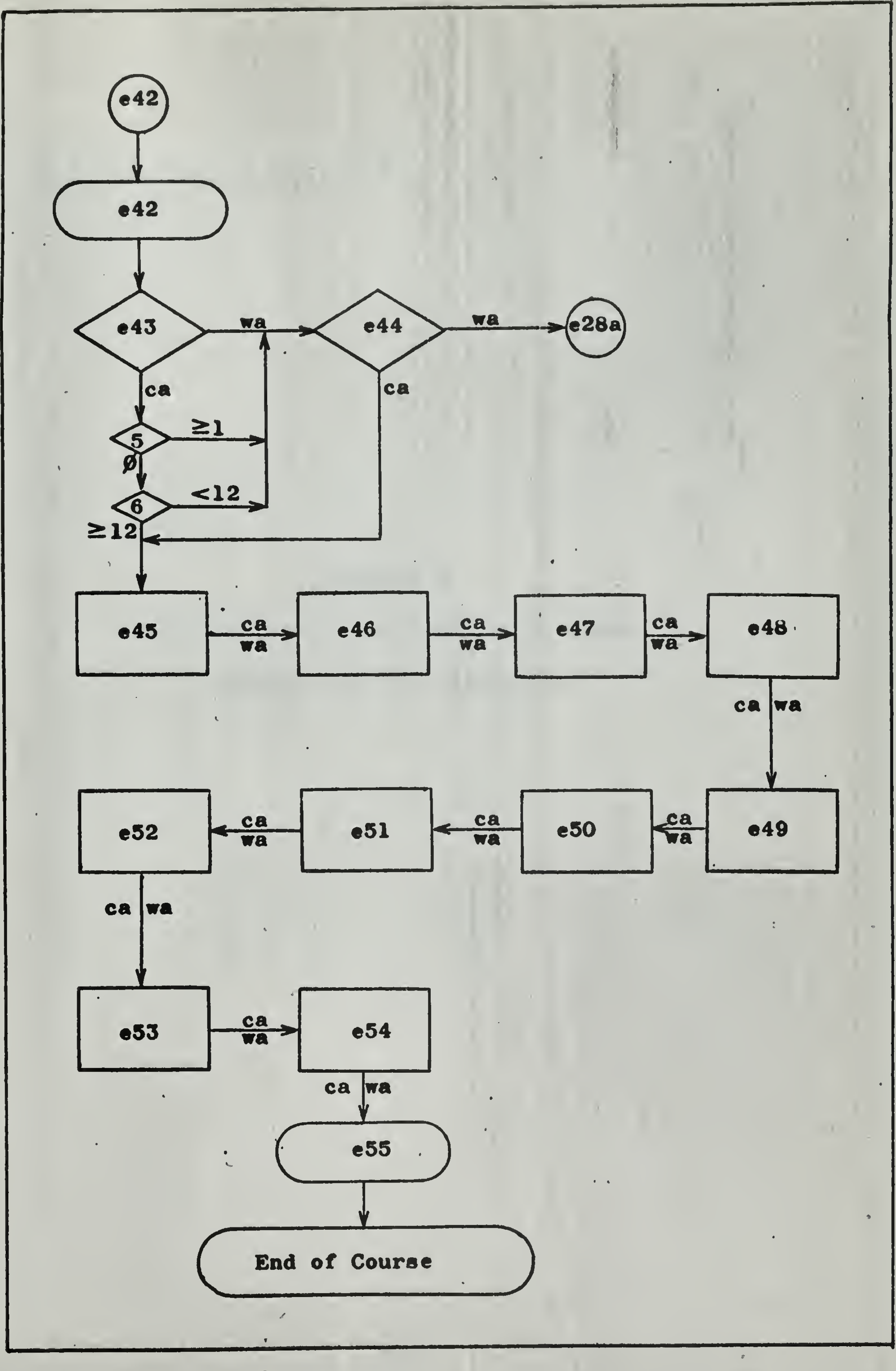
e42
e42
e43
wa
e44
wa
e28a
ca
ca
5
≥1
0
6
<12
≥12
e45
ca
wa
e46
ca
wa
e47
ca
wa
e48
ca
wa
e49
ca
wa
e50
ca
wa
e51
ca
wa
e52
ca
wa
e53
ca
wa
e54
ca
wa
e55
End of Course

APPENDIX G

IBM 1401, 1440, or 1446 Operating System

Computer Assisted Instruction

File Number 1401/1440-48
Form C24-3253-1

IBM **Systems Reference Library**

IBM 1401, 1440, or 1460 Operating System Computer Assisted Instruction

This reference publication describes the IBM Computer Assisted Instruction (CAI) program for the IBM 1401, 1440, or 1460 Data Processing System. Included is a general description of CAI as an aid in writing and presenting instruction courses through the IBM 1050 Data Communications System. The flexibility of CAI makes it the ideal program for the school, industry, or military institution experimenting with advanced teaching techniques. Used experimentally, it can be evaluated by the educator himself for its proper place in the education picture.

For titles and abstracts of associated publications, see the *IBM 1440 Bibliography,* Form A24-3005, the *IBM 1401 and 1460 Bibliography*, Form A24-1495, and the *IBM Tele-processing Bibliography,* Form A24-3089.

Preface

IBM is always vitally interested in the progress of education. Computer Assisted Instruction (CAI) is seen as an important contribution to that progress at a time when educational methodology is receiving critical appraisal. Rapid advances in technology are being made in our educational institutions, in industry, and in military establishments. Here CAI can serve experimentally as a laboratory in developing educational courses that offer potential for:

1. Higher rates of retention
2. Acceleration of curriculum and training
3. Uniformly high teaching standards.

Major Revision, March 1965

This publication, Form C24-3253-1, is a major revision of, and obsoletes, Form C24-3253-0. Changes have been made throughout the publication. Most of the changes consist of clarification and expansion of technical details.

Copies of this and other IBM publications can be obtained through IBM Branch Offices.
Address comments concerning the content of this publication to IBM Product Publications, Endicott, New York 13764

© 1964 by International Business Machines Corporation

Contents

Computer Assisted Instruction for 1401, 1440, or 1460 5

- Programmed Instruction 5
- Computer Assisted Instruction 5
- Machine Requirements 6
- An Experimental Tool 7
- Author 8
- Student 9

Functional Features 9

- Student Response Recording 10

Coursewriter Language 10

- Instruction Format 10
- Counters 13
- Functions 13
- Text Formating 14

CAI Procedures 15

- Author Control Words 15
- Student Control Words 16

Proctor Control 17

Non-Educational Mode Operations 19

Course Writing and Instructional Techniques 19

- Sample Sequences 19
- Variations in Student Answers 23

Appendix 28

Glossary 29

Index 30

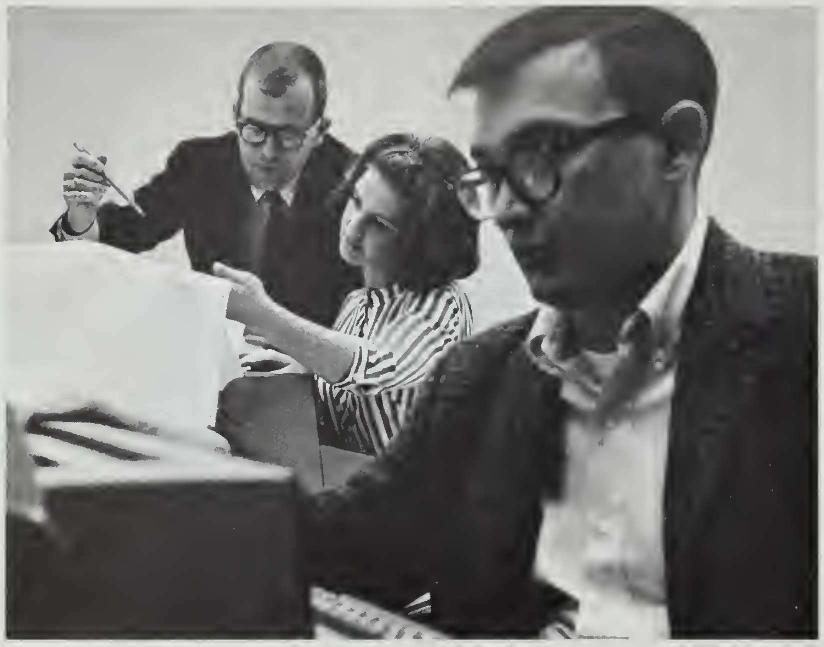

Figure 1. Instructor and Students at Printer-Keyboard

Computer Assisted Instruction for 1401, 1440, or 1460

The problems that beset our educational systems concern all of us. Although rapid increases in population, crowded schools in selected areas, and shortages of qualified teachers have gained widespread attention, the problems are not those of the school and university alone. All areas of business must keep in step with the continually changing training requirements brought about by dynamic changes in technology. Each technological advance also broadens the spectrum of skills the military must learn. Solutions, which must be found soon, may bring innovations in our teaching and training methods.

Programmed Instruction

For many years, self-instruction devices or "teaching machines" have been available. Although their value as "teachers" may be limited, many have been found valuable in helping the student to progress at his own rate according to his abilities. Most of these techniques can be grouped under the name of programmed instruction.

Over thirty years ago, S. L. Pressey devised an automatic testing machine that was soon used as an instructional device. This device appears to be the first of the many and varied teaching machines. These early machines were primarily testing devices displaying one question at a time. Most of them were designed so the student had to answer each question correctly before proceeding to the next question.

A number of educators and researchers have contributed to the recent increase in interest in teaching machines. In 1954, B. F. Skinner described an experimental teaching device designed to present a carefully programmed set of instructions. He introduced the use of constructed answers instead of multiple choice. He placed great importance on carefully organized programming of the course material, reinforcing the student's answer at each step.

As we know it today, a programmed-instruction course presents instructions, questions, answers, and other information to the individual student in a carefully planned sequence (program). Because he actively participates in the course, the student is continuously aware of his progress. Every error he makes is followed immediately with information to help him understand what led him to make the mistake, which he is often required to correct.

In a well-prepared program the student progresses according to his individual capabilities. The more capable student moves faster because he makes fewer errors. The slower student receives the practice and information he needs to aid him in learning. As he grasps the subject, he progresses through the course.

Computer Assisted Instruction

A relatively new method of instruction with many of the advantages of the individual-student instruction is called Computer Assisted Instruction (CAI). This method allows the instructor to use the computer as a means of disseminating instruction to a number of students individually.

Pioneering studies in computer assisted instruction by the IBM research organization were started in 1958 by Gustave J. Rath, Nancy S. Anderson, and Richard C. Brainerd. They investigated the use of a computer and a typewriter to teach binary arithmetic. In these preliminary studies, only one typewriter terminal was used, and instructions to the students were given orally by the instructor rather than by the computer.

The present concept of computer assisted instruction evolved from a system developed by William R. Uttal in 1961. Experiments were performed with a modified IBM 650 Data Processing System and specially designed electrical equipment to connect the student stations to the computer.

Present experimental systems, developed at the Thomas J. Watson Research Center, consist of standard IBM equipment such as:

1. Large-capacity storage units
2. A central processing or computing unit
3. A transmission control unit or message "traffic" regulator
4. A buffer or temporary storage unit
5. Student teaching stations.

The large-capacity storage units are IBM 1311 Disk Storage Drives, which store the entire contents of the course material along with individual and class performance records and other bookkeeping information. Each section of storage contains an address so that course material can be retrieved from any area of storage.

The processing unit acts as an intermediary between the student and the course material stored in the disk storage units. For example, it retrieves questions from the storage units and presents them to the student through the typewriter, compares the student's answers with all possible answers listed by the instructor, and then follows with appropriate instructions, such as "present next question" or "recommend remedial reading."

While the computer is working on one student's problem, responses from other students are temporarily stored in a buffer memory. The "traffic" of messages between students and computer is directed by the transmission control unit. Because the system handles messages so rapidly, each student feels that the computer is working for him only.

Computer assisted instruction generally follows the pattern of programmed instruction, but represents a significant advance over previous forms of this learning concept. IBM researchers have used computer assisted instruction to explore a number of techniques that represent major advances over earlier approaches to programmed instruction.

An experimental course in elementary statistics, developed by an IBM research psychologist, resembles an advanced version of the "scrambled textbook." In this particular course, however, the student constructs his answers rather than making a multiple-choice answer. The computer compares the constructed answer with anticipated responses stored in the machine to determine what action to take next. By using the computer in this way, a student's path can be "branched" to appropriate remedial material depending on his answer.

In another experiment, an IBM psychologist developed a drill technique for a course in German. After the student completes a reading assignment, a series of translation exercises is presented on the typewriter. This series tests the student's knowledge of the new material. If the student makes an error in translation, he is informed of his mistake and asked to try again. Although there is no limit to the number of trials a student may make, he can ask for the correct answer if he wishes. The computer records his mistakes and later repeats the exercises that were not answered correctly. If the student misses too many exercises, the system presents the entire lesson again later.

As a result of experimentation like this within IBM, we believe that a computer assisted instruction system may open a new dimension in instructional techniques.

Machine Requirements

CAI, when used with each of four systems, requires a minimum of equipment as described here.

1. *1440-1448 System*

   1441—A6 Processing Unit with 16,000 positions of storage with Console Attachment, Direct Seek, Disk Storage Control, Indexing, and Store Address Register, Bit Test, Transmission Control Unit Attachment, and Printer Attachment

   1442—Card Read Punch Model 1 with Card Read Punch Adapter

   1443—Printer Model 1 with Selective Character Set and Printer Control

   1447—Console Models 1 and 4 with Sense Switches

   1311—Disk Storage Drive, one Model 1 and one Model 2 with Direct Seek feature

   1448—Transmission Control Unit Model 1 with 1050 Attachment feature, Fixed Time-Out feature (New Line and Line Feed, Horizontal Tab), and, as required: Line Group, Line Adapter Set, Common Carrier Adapter Set attached to lines 1 through 12. The user can also optionally specify Text Time-Out Suppression to prevent the timer from operating at the normal 9-18 second disconnect. This optional feature is to be used with the Text Time-Out Suppression on the 1051 Control Unit.

   1050—Data Communication System, up to 12 systems, each consisting of a 1051 Control Unit Model 2 with an "A" Terminal Identification Letter and a 1052 Printer-Keyboard with the First Printer feature. (If desired, the Text Time-Out Suppression feature can be ordered on the 1051 as a required companion to the one specified on the 1448.)

2. *1460-1026 System*

   1441—B Processing Unit with 12,000 positions of storage with Disk Storage Control, Direct Seek, Indexing and Store Address Register, Bit Test, Transmission Control Unit Attachment

   1447—Model 1 with Sense Switches

   1461—Model 1

   1402—Model 3

   1403—Model 2

   1311—One Model 1 and one Model 2 with Direct Seek

   1026—As many as four Model 1's. The first 1026 Transmission Control Unit must have the Expanded Line feature and as many as three additional 1026 Model 1's each with the Additional Line feature. The user can also optionally specify Text Time-Out Suppression to prevent the timer from operating at the normal 9-18 second disconnect. This optional feature is to be used with Text Time-Out Suppression on the 1051 Control Unit.

1050–Data Communication System with as many as four systems each consisting of a 1051 Control Unit Model 2 with an "A" Terminal Identification Letter and a 1052 Printer-Keyboard with the First Printer feature. (If desired, the Text Time-Out Suppression feature can be ordered on the 1051 as a required companion to the one specified on the 1026 components.)

3. *1440-1026 System*

1441–A5 Processing Unit with 12,000 positions of storage with Direct Seek, Disk Storage Control, Indexing and Store Address Register, Bit Test, Interrupt, Transmission Control Unit attachment, Print Attachment

1442–Model 1 and Adapter

1443–Model 1 with Selective Character Set and Printer Control

1447–Model 1 with Sense Switches

1311–One Model 1 and one Model 2 with Direct Seek

1026–As many as four Model 1's. The first 1026 Transmission Control Unit must have the Expanded Line Feature, and as many as three additional 1026 Model 1's each with the Additional Line Feature. The user can also optionally specify Text Time-Out Suppression to prevent the timer from operating at the normal 9-18 second disconnect. This optional feature is to be used with Text Time-Out Suppression on the 1051 Control Unit.

1050–Data Communication System with as many as four systems, each consisting of a 1051 Control Unit Model 2 and a 1052 Printer-Keyboard with the First Printer feature. (If desired, the Text Time-Out Suppression feature can be ordered on the 1051 as a required companion to the one specified on the 1026 components.)

4. *1401-1026 System*

1401–Model B, C, or E with 12,000 positions of storage with Disk Storage Adapter, High-Low-Equal Compare, Advanced Programming, Bit Test, Console Auxiliary Adapter, Sense Switches

1402–Model 1

1403–Model 1

1406–Model 2

1409–Model 2

1311–One Model 4 and one Model 2 with Direct Seek

1026–As many as four Model 1's. The first 1026 Transmission Control Unit must have the Expanded Line feature, and as many as three additional 1026 Model 1's each with the Additional Line feature. The user can also optionally specify Text Time-Out Suppression to disable the timer from operating at the normal 9-18 second disconnect. This optional feature is to be used with Text Time-Out Suppression on the 1051 Control Unit.

1050–Data Communication System with as many as four systems, each consisting of a 1051 Control Unit Model 2 and a 1052 Printer-Keyboard with the First Printer feature. (If desired, the Text Time-Out Suppression feature can be ordered on the 1051 as a required companion to the one specified on the 1026 components.)

An Experimental Tool

Because the application of computers to instruction is relatively recent, experience with the implementation of educational methodology on data processing systems is limited. Therefore, many questions of effectiveness are difficult to dispose of experimentally. It is, thus, particularly desirable to undertake research where the scope of the course material is known, the competence involved in taking the course is understood, and the quality of learning can be measured on completion.

The experimental techniques outlined in this publication are so practicable that it is appropriate today to begin evaluating those research questions that can best be answered through system use. CAI is, therefore, presented, not as a complete solution to any one problem, but as an experimental tool in discovering new dimensions in education.

CAI programs the data processing system (Figure 2) to act as a medium between the instructor and a number of students. Both instructors and students can participate in the course at various locations (local and remote) and at various times or at the same time. With

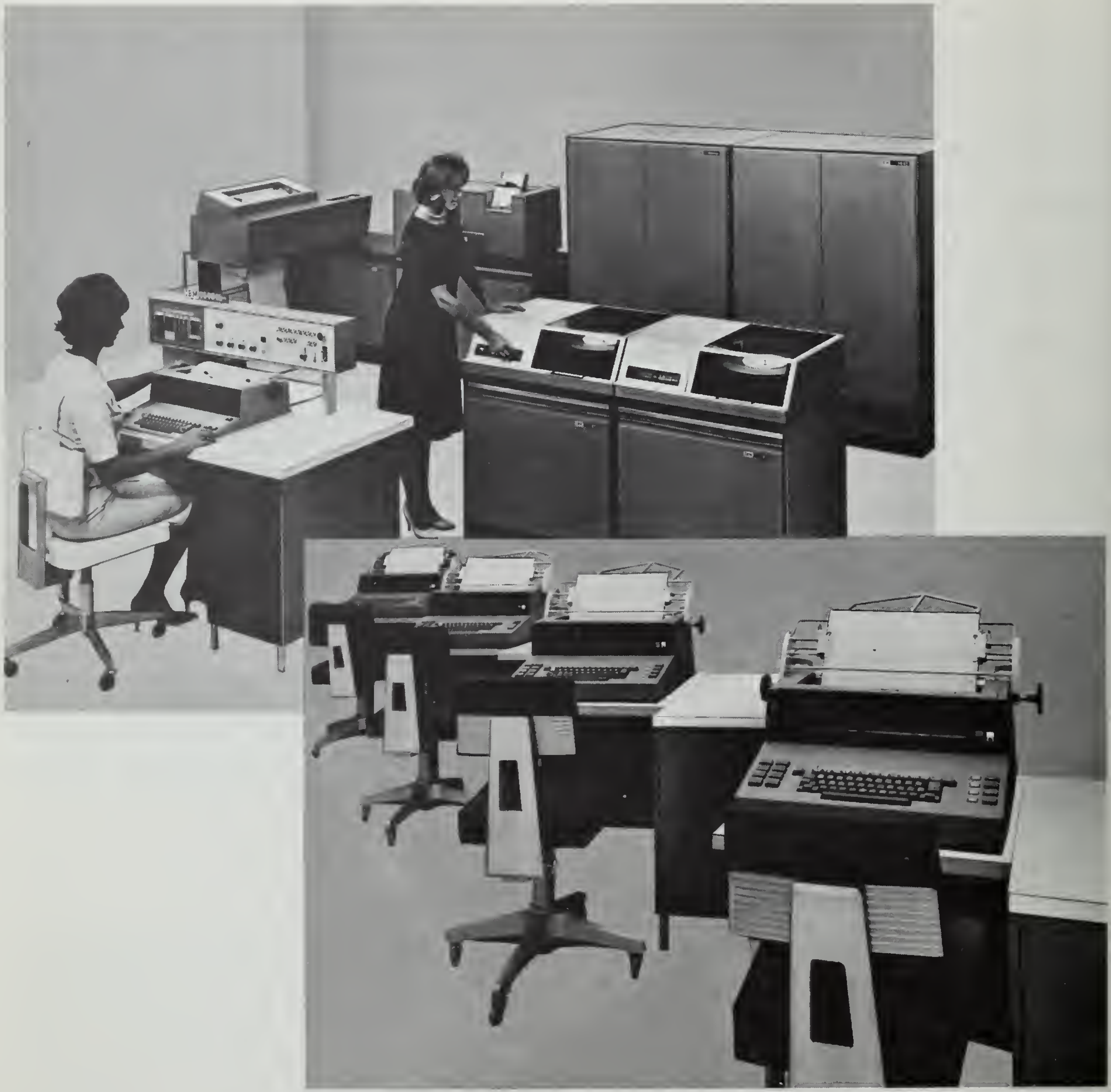

Figure 2. IBM 1440 as Control Center for IBM 1050 System Terminals

the IBM 1401 or 1440 as the course processing center, an IBM 1050 Data Communications System acts as the communication link between the students and the computer (Figures 3 and 4).

Through CAI, the author writes his course so that each student receives individual instruction. He has a freedom that few teachers possess in the classroom. He guides his students along the path best suited to each. The advanced student does not cover any material that the instructor feels is unnecessary to his progress or that might be below his level. The slow student reviews important steps that he finds difficult to understand.

Author

CAI enables the author to organize the course in any way he wishes, evaluating the student's capabilities, learning his background, giving him assignments, asking questions, and then directing him to the parts of the course that best suit him. The author may use

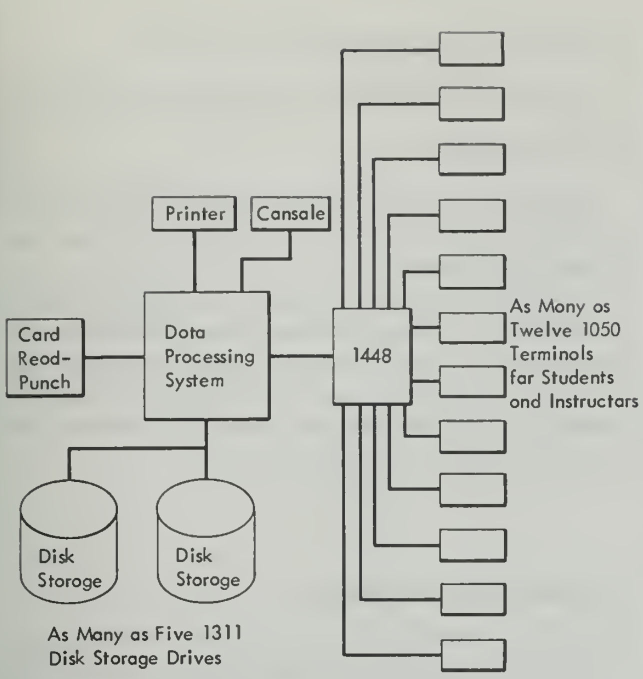
Printer
Console
Card Read-Punch
Data Processing System
1448
As Many as Twelve 1050 Terminals for Students and Instructors
Disk Storage
Disk Storage
As Many as Five 1311 Disk Storage Drives

Figure 3. Typical 1440-1448 Computer Assisted Instruction System Configuration

various sequences of questions, statements, and instructions. He may use the familiar "frames" of programmed instruction, or he may turn to a method of instruction quite dissimilar to it. Not only can he write his course while the students are taking it, but he can also go back and revise immediately if he wishes. The computer's statistical analysis of the students' reactions gives the author an accurate report of the results of his course. Such reports facilitate his readily revising and improving the course based on actual experience even before the students have completed it.

As he receives the reports, he continuously realizes how he can better adapt the course to the individual student. It takes only a few such reports to suggest to the author new and varied levels and paths for students to follow.

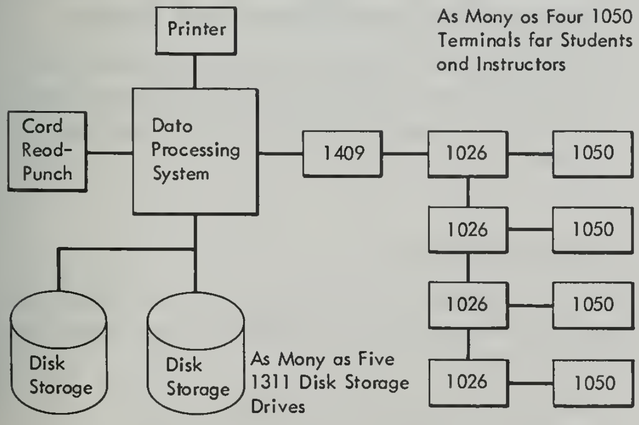
Printer
As Many as Four 1050 Terminals for Students and Instructors
Card Read-Punch
Data Processing System
1409
1026
1050
1026
1050
1026
1050
1026
1050
Disk Storage
Disk Storage
As Many as Five 1311 Disk Storage Drives

Figure 4. Typical 1401-1026 Computer Assisted Instruction System Configuration

Student

The student paces himself, with the knowledge that the program will direct him at the proper time to the part of the course that best suits him.

Students may participate in the course at various times. No prescribed time schedule is necessary. If a student reaches an impasse, he calls for "help" from the computer in the form of the correct answer. The statistical analysis of the student's progress measures his efforts and abilities.

Functional Features

CAI consists of:

1. A monitor to supervise writing and presenting courses.
2. An assembler to enable authors to communicate with the computer when writing and revising courses.

The CAI program:

1. Enables authors to write and correct course material while students are taking courses.
2. Enables a proctor, who operates the system, to undertake administrative routines.
3. Collects data on student's responses for later analysis.
4. Enables authors or programmers to add new capability to CAI if they are thoroughly knowledgeable with the internal program organization.
5. Operates as many as five courses per disk pack simultaneously.
6. Uses as many as twelve IBM 1050 point-to-point (one student/author terminal) lines with an IBM 1448 Transmission Control Unit, and as many as four lines with four IBM 1026 Transmission Control Units. This does not imply that a maximum of only twelve students can use the system, for more than one student, or even an entire classroom, might share a terminal. Figure 5 shows the 1050 terminal with a Formaliner*.

All course input and output to the system is typed on the printer-keyboard of the IBM 1050 Data Communi-

---

* Available from Moore Business Forms

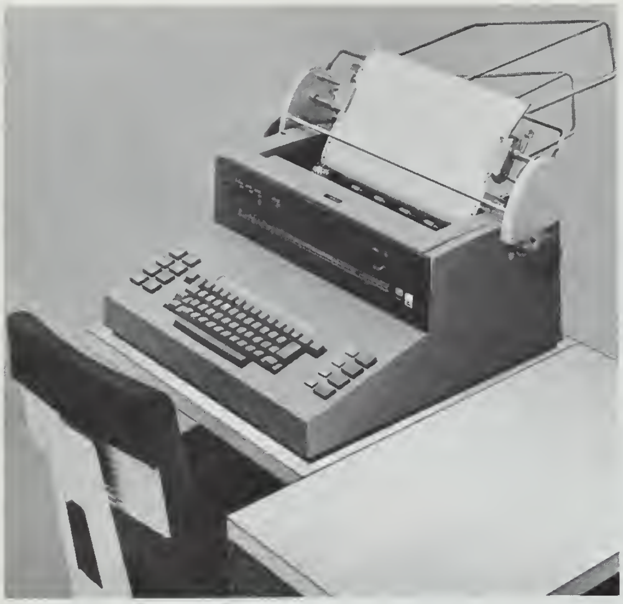

Figure 5. Typical Student Printer-Keyboard at IBM's Thomas J. Watson Research Center

cations System, which may be remote from the computer. The course material is then stored on an IBM 1316 Disk Pack. These interchangeable packs provide large and flexible course storage capability.

Two drives are required for minimum operation of the system. One drive is for recording student responses. The other drive contains system subroutines, identification, course records for the maximum of five courses per pack, storage for author functions and course material, and student records.

Student responses are streamed out in 300-character records while students are taking the course. When authors and students have completed their learning activities, the proctor can place a utility program on the system to extract and print response data for analysis. Such utility programs can only be operated in the non-educational mode (when no students or authors are using the system).

Student Response Recording

Eight choices are available to the author for recording student responses:

1. Correct responses
2. Incorrect responses
3. Correct and incorrect responses
4. Unrecognizable responses
5. Correct and unrecognizable responses
6. Incorrect and unrecognizable responses
7. Correct, incorrect, and unrecognizable responses
8. No recording.

The author should specify to the proctor the type of recording desired for each student at the time the student is registered.

In addition to the actual response, the system records the student's number, the course name, the location of the question in the course, the type of response, the date of the response, and the contents of student counters. The system does not record the student's use of the *help* and *go to* control words.

Coursewriter Language

An author writes his course by keying it on the typewriter-style IBM 1052 Printer-Keyboard in the form of sequential instructions. As a guide to the format of his course statements, the author may use a Coursewriter Instruction Sheet, Form X24-3336 (Figure 6). With the instruction sheet, a secretary can key in the course material thereby optimizing system time.

When the course is completed or partially written, students may begin the course from the same or another keyboard.

As the author writes the course, it is stored on the IBM 1316 Disk Pack. He can modify any part of the course at any time – even while students are actively participating in the course. The only restriction is that the author cannot modify a course statement at the same time that a student happens to be using that instruction.

The Coursewriter language has two parts:

1. A set of 12 instructions or operation codes used by the author while writing his course to instruct CAI how to use this course material with students.
2. A set of control words to CAI to aid the author in writing his course, help the student while taking a course, and assist the proctor in operating the system.

Instruction Format

Each course statement has three parts: the *label*, the *operation code* and the *text*, which is also called the course material.

1. *LABEL.* The label (or a sequence number relative to the label) allows unique identification of each "block of print" (up to a 150-character message

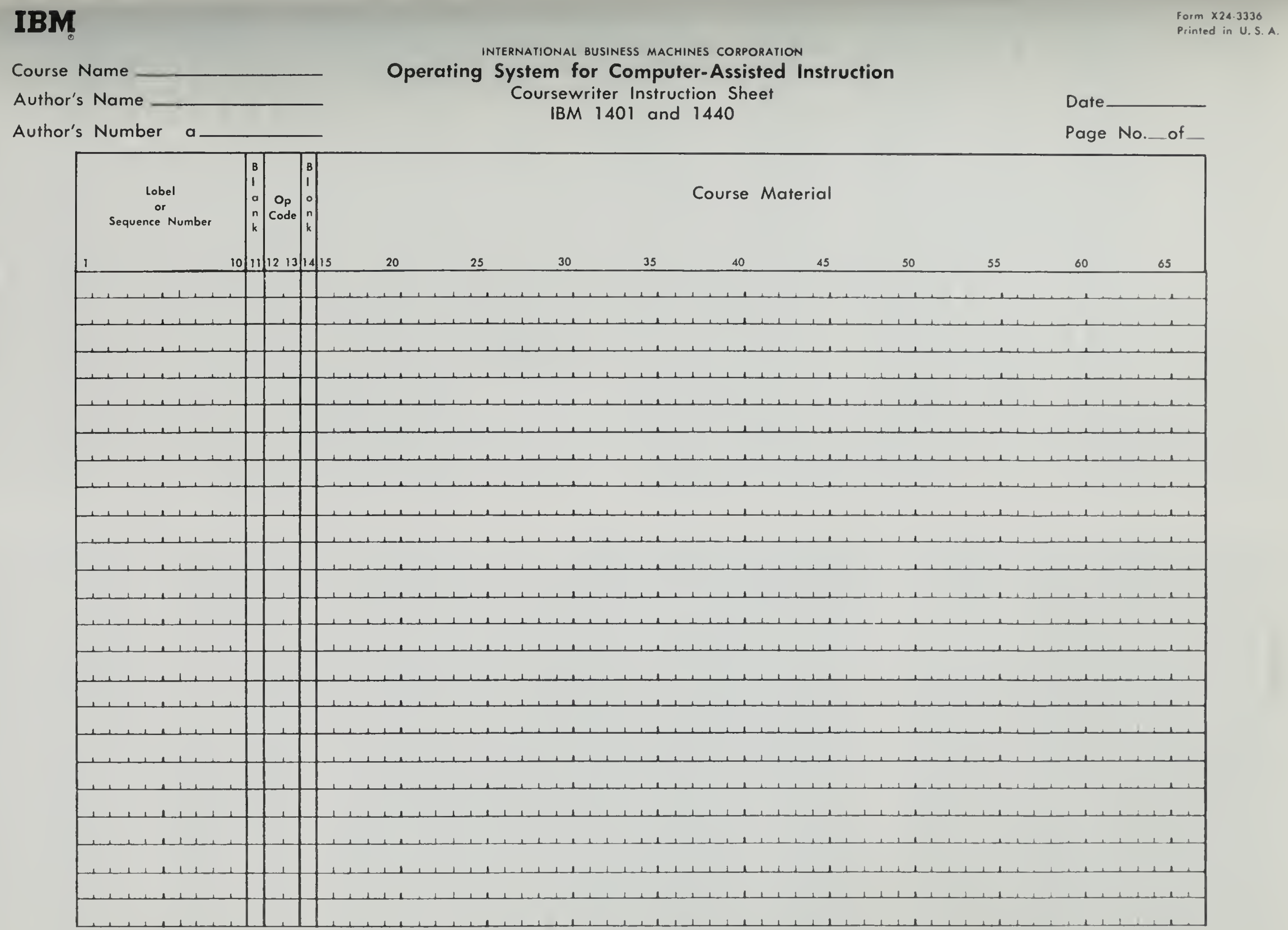

IBM

Form X24-3336
Printed in U. S. A.

INTERNATIONAL BUSINESS MACHINES CORPORATION

Operating System for Computer-Assisted Instruction

Coursewriter Instruction Sheet
IBM 1401 and 1440

Course Name ______

Author's Name ______

Author's Number a______

Date______

Page No.__of__

Label or Sequence Number 1–10	Blank 11	Op Code 12 13	Blank 14	Course Material 15 20 25 30 35 40 45 50 55 60 65

Figure 6. Coursewriter Instruction Sheet

completed with an end-of-block character). A label consists of one to ten alphabetic or numeric characters, or a combination of both. All statements immediately following a label are sequenced automatically by the assembly program. To define a label, the author keys a carrier return (when in the operation-code field), the label, and an end-of-block code. The program then executes a carrier return, prints the number "1" in the label field, and spaces to the operation-code field. All blocks of print are numbered sequentially by the program up to the next label.

2. *OPERATION CODE.* The operation code defines the action to be performed on the third part of the course statement, which is called the text or course material.

The twelve operation codes must be typed in *lower case* characters by the author. He must always key one space after the operation code. The operation codes come under two classifications: major and minor.

The major operation codes are: *rd, qu, ca, wa, un, nx, cb,* and *wb*. The minor operation codes are: *ad, br,* and *ty*. The *fn* operation code may be used as either a minor or major operation code.

The major operation codes are always executed in the order they are presented in the course by the author. The major operation codes determine the use of the minor operation codes, which follow them.

The operation code mnemonics and their meaning to CAI are:

rd causes the program to print the course material on the student printer-keyboard. CAI then waits for the student response. Any response from the student causes CAI to execute all minor operation codes following this instruction and then proceed to the next *rd* or *qu* instruction.

qu causes the program to print the course material on the student printer-keyboard. CAI then waits for the student response. Upon receiving the response, CAI executes all minor operation codes following this instruction and, at least, the first major operation code that follows this instruction.

ca specifies that the text of this instruction is an anticipated correct answer to the last *qu* instruction. It causes the student response to be compared with the text of this instruction. If the response and the text are identical, all minor operation codes that follow this *ca* or set of *ca* and *cb* instructions are executed. CAI then proceeds to the next *rd* or *qu* instruction. If the response and text are not identical, CAI executes the next major operation code.

cb specifies that the text of this instruction is another correct answer. It must follow a *ca* or another *cb* instruction. The *cb* instruction causes CAI to react to the student response in the same manner as it does to the *ca* instruction.

wa specifies that the text of this instruction is an anticipated wrong answer to the last *qu* instruction. It causes the student response to be compared with the text of this instruction. If they are identical, all minor operation codes that follow this *wa* or set of *wa* and *wb* instructions are executed. If a *ty* instruction is not included in the set of minor operation codes that follow, the word "incorrect" is typed out by CAI. CAI then returns to the first major operation code following the last executed *qu* instruction and waits for the student to respond again. If they are not identical, CAI executes the next major operation code.

wb specifies that the text of this instruction is another wrong answer. It must follow a *wa* or another *wb* instruction. The *wb* instruction causes CAI to react to the student response in the same manner as it does to the *wa* instruction.

un specifies that the student response is an unrecognizable answer. It causes the program to print the text of the statement on the student printer-keyboard. CAI then executes all minor operation codes that follow this instruction. CAI then returns to the first major operation code following the last executed *qu* instruction and waits for the student to respond again. If multiple *un*'s are defined for the same question-answer group, the first *un* text is displayed for the first unrecognizable student response, the second *un* text for the second response, and the nth *un* text for the nth response. The last *un* is repeated if more unrecognizable responses are given. The limit on the number of *un* statements for one question-answer group is ten. If this limit is exceeded, the tenth *un* statement is repeatedly recognized by CAI, and the additional *un* statements are ignored.

nx causes CAI to execute all minor operation codes that follow this instruction and, at least, the first major operation code encountered. The *nx* instruction has no associated text. This operation follows only an answer set. Its purpose is to alert the program to execute the minor operation codes that immediately follow the *nx* if the response received from the student disagrees with the text of the answer set preceding the *nx* instruction.

ty causes CAI to print the text of this instruction on the student printer-keyboard. CAI then proceeds according to the logic of the major operation code that caused this instruction to be executed.

ad causes CAI to add the contents of one student counter or a constant to another counter. There are 10 three-digit counters per student per course. If the operands of the *ad* instruction are unsigned, CAI assumes a plus (+) sign. If the second operand is omitted, CAI assumes that the second operand is the same as the first operand. If the last operand is not a counter, the instruction is ignored by CAI. The format of the *ad* instruction is:

counter
ad ± or // ± counter
constant

br causes CAI to execute the instruction associated with the label specified in the text of the *br* instruction. This instruction is executed unconditionally if it has only one operand. If there is a second and third operand (they may be counters or constants), these operands are added in a work area. If the total is zero or negative, CAI branches to the location specified in the first operand and executes the first instruction encountered there. If the total is positive, this instruction is ignored. If the operands are unsigned, CAI assumes a plus (+) sign. If the third operand is omitted, CAI assumes that the third operand is the same as the second. The format of the *br* intruction is:

Unconditional *br* br label

counter counter
Conditional *br* br label//± or //± or
constant constant

fn causes CAI to call and execute a machine-language subroutine residing on the systems pack. This permits wide flexibility in experimenting with new computer techniques in teaching. The text field contains the name and operands of the subroutine.

3. *TEXT*. The text (or course material) may be instructions to the student, questions to the student, predicted correct or wrong answers from the student, labels to serve as reference points in a course, counters, or names and operands of functions.

Counters

CAI automatically provides 10 three-digit counters for each student in each course. The counters are identified by the author by referring to them as c1 through c10. When referenced by the author, the "c" must be a small letter. If a counter number higher than 10 is used, CAI will accept the second digit from the left as the valid counter number.

The counters may be used by the author for record keeping while the student is taking a course. The counters are used with the *ad* and *br* operation codes.

By testing the counters with the conditional *br* instruction, the author may provide varying paths through his course for a student, based upon the student's performance.

A counter can be reset to zero by using the *ad* instruction. This instruction, in effect, permits the counter to be subtracted from itself and thereby resets itself to zero. This is how counter 1, for example, may be reset to zero:

ad —c1//c1

Functions

Functions are machine-language subroutines. They must be written by a person familiar with the internal structure of CAI. They permit the user to add new capabilities to the system.

A function read from the disk pack may reside in one of two or three 900-position areas in core storage.* These areas are set aside by CAI solely for use by the functions. CAI initializes index register 1 to contain the address of the area in core storage in which the function is to reside. Therefore, all instructions referencing a location within the area where the function is located must be modified by index register 1.

Index register 3 contains the address of the line input/output area. All function subroutines must begin with these three autocoder instructions:

```
ORG   918
DCW   'function name'   (function names must be
                           exactly 10 characters)
SW    266 + X3
        .
        .      (main body of the function in
        .        autocoder)
```

Before leaving the function subroutine, the instruction:

```
CW   266 + X3
```

must be executed.

The area assigned by CAI to a function may be reserved exclusively for that function by inserting an instruction within the function. Once an area is reserved, no other function may use that area until it is released. This instruction is used for reserving an area:

---

*The 1440-1448 system provides for three 900-position areas. The 1440-1026 and the 1401-1026 systems provide for two 900-position areas in core storage. The capacity of any one function is 900 characters.

A one + X1, 902 + X1

The label "one", representing number 1, should be defined by a DCW. The instruction for reserving the area may be coded after a word mark is set in position 266 + X3. When the area is to be released, the "one" should be subtracted from 902 + X1. This instruction should immediately precede the clear word-mark instruction.

Function subroutines are called, relocated and entered automatically when encountered by CAI. However, the exit from a function subroutine must be an autocoder branch instruction to the appropriate point in the CAI program. This means that the person writing a function subroutine must use a program listing of the CAI program.

Functions are loaded on the Systems pack by the Functions Load program.

Four general function routines are provided initially for the author. These functions are edit1s (edit-one-s), edit1a (edit-one-a), limit1c (limit-one-c), and limit1w (limit-one-w).

edit1s This function must immediately follow a *ca* or *wa* instruction. When executed, it edits out certain characters from the student's response. The characters to be edited are specified as operands of the functions.

Op Code	*Name*	*Operands*
fn	edit1s	//sh sp tab c/r OR all

There are five possible operands. The author may specify any one or more in any order.

sh as an operand instructs the function to remove all up- and down-shift characters.

sp as an operand instructs the function to remove all space characters.

tab as an operand instructs the function to remove all tab characters.

c/r as an operand instructs the function to remove all carrier-return characters.

all as an operand instructs the function to remove shifts, spaces, tabs and carrier-return characters.

As each character is removed, the remainder of the message is packed together. After the student's response is edited and compacted, a comparison with the previous *ca* or *wa* results in action according to the rules of *ca* or *wa*.

edit1a This function must immediately follow a *ca, wa,* or *fn* edit1s instruction. When executed, it operates on the text of the preceding *ca* or *wa* operation code. The characters to be edited out are specified as operands of the functions. The *ca* or *wa* instruction is then executed.

Op Code	*Name*	*Operands*
fn	edit1a	//sh sp tab cr OR all

The definitions of the operands are the same as defined under *edit1s*. This editing does not change the original course statement. The comparison results are the same as for edit1s.

limit1c This function, when executed, compares the student's response to determine whether it is within the numerical limits, inclusively, specified in the operand of the function. This function, in effect, takes the place of a *ca* instruction.

Based upon the comparison, the function directs the program to proceed in the same logic as specified for a *ca* operation code. The maximum-size constant is a ten-character decimal number. The ten-character decimal number may contain ten digits on either side of the decimal point. Therefore, there may be as many as twenty digits in the one constant. If the sign is omitted, a plus sign is assumed.

Op Code	*Name*	*Operands*
fn	limit1c	//±constant//±constant

limit1w This function is identical to limit1c except that, based upon the comparison of the student's response to the operand of the function, it will proceed with the logic of a *wa* operation code.

Op Code	*Name*	*Operands*
fn	limit1w	//±constant//±constant

Text Formating

To align the left margin of the printed material for teaching, the author writes his course material in a specified manner. For a *qu, rd, ty,* or *un* operation code, if the author wants the carrier returned so that the following response typed by the student is at the left margin, he ends the argument with a carrier return and an end-of-block code (rather than only an end-of-block code).

For a *ca, cb, wa, wb, br, ad, fn,* or *nx* operation code, only an end-of-block code is necessary because the program automatically causes a carriage return after each block of print is typed.

The author has a choice of having the student's response typed on the same line that the question appears or on a separate line with the *qu, rd, ty,* or *un* operation code. If the author wants to have the student's response appear on a separate line, he must key a carrier return after each of these instructions. If he does not, the student's response is typed on the same

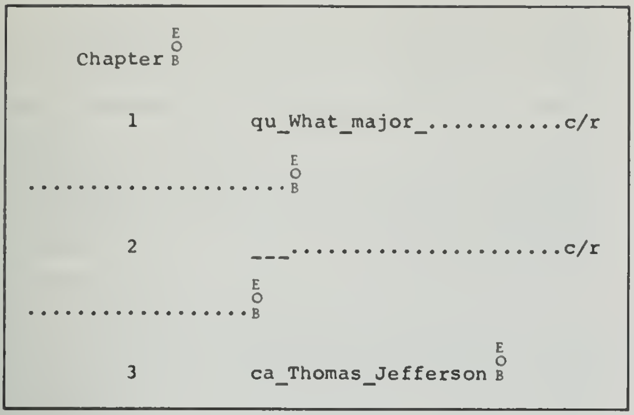
Chapter
E O B
1
qu_What_major_..........c/r
....................E O B
2
___.....................c/r
..................E O B
3
ca_Thomas_Jefferson E O B

Figure 7. Typical Author Entries

line as the course material and CAI returns the carrier automatically when the response is completed.

When a student is taking a course, he must end each response with an end-of-block code.

Figure 7 illustrates the varied formats of a line of print, a block of print, and a course statement. Notice that a block of print is completed by an EOB character typed by the author. A block of print cannot exceed 150 characters. Multiple blocks may be used with the *rd, qu, un,* and *ty* operation codes.

In Figure 7, the dash (–) represents a space. The periods (. . .) represent text. The space, the EOB character, and the carrier-return character (c/r) do not print. The label-sequence numbers print automatically. In Figure 7:

The ten-position label field contains *Chapter.*

The two-position Op-code field contains *qu.*

From *qu* through the following c/r is a *line of print.*

From *qu* through the following EOB is a *block of print.*

From *qu* through the second EOB is a *course statement.* (A course statement can include many blocks.)

The author can type as many as 149 text characters before giving an end-of-block code. If additional blocks are required, the author continues by spacing three spaces past the operation code and then typing the text.

CAI Procedures

Three groups of control words enable authors, proctors, and students to use CAI.

Author Control Words

Ten control words aid the author in writing, revising, and checking his course. They are:

sign on
insert after
end
type
delete
move
go to
help
author
sign off

The ten control words must be typed in lower-case (small) letters. The control words and a description of each are as follows:

sign on To begin work on a printer-keyboard, the author must use the control word *sign on.* The course pack must be loaded on the system by the proctor before the author signs on.

insert after To begin writing or to continue writing a course, the author types on his printer-keyboard:

insert after label
or
insert after label-sequence

If the author is beginning a course, this control word defines the label as the first label of the course. If he is continuing a course, the label-sequence number specifies the statement he wants the new material to follow. The program responds to this instruction with the next sequence number. The author then begins to write the course.

The author writes the course by typing an operation code, a space, the text corresponding to the operation code, and the end-of-block code. The CAI program checks for valid operation codes and assembles the course on the course disk pack. If an operation code is invalid, the author is notified with a message. He may then repeat the statement with the correct code.

For the *br* instruction, CAI inserts the branch address that has been equated by CAI to the label specified by the text. If this label has not been defined at this stage of writing the course, this condition is noted and, when the label subsequently becomes assigned, CAI inserts the branch address automatically.

end The author must use the control word *end* to specify to CAI that he has finished working with the *insert after* control word.

No other control word may be used after the author has used the *insert after* control word except *end* and *sign off*. To use the *end* control word, the author need only type: *end.*

type If the author wants part or all of his course typed on his printer-keyboard, he uses the control word *type*. This control word may be used in four different formats. They are:

1. To receive a type-out of a section of the course, this format may be used:

   type label-sequence//label-sequence

2. To receive a type-out of a section of the course starting at a specified point and continuing to the end of the course, this format may be used:

   type label-sequence

3. To receive a type-out of a section of the course starting at the beginning of the course and continuing to a specified point, this format may be used:

   type//label-sequence

4. To receive a type-out of the entire course, this format is used:

   type

Note: The double slash (//) is a delimiter character used with the CAI control words and the functions as a method of separating data fields.

delete The author uses the *delete* control word to remove statements from his course. The author types *delete* and one or two label-sequence numbers on the printer-keyboard. If only the one label-sequence number is specified, only the statement associated with this label-sequence number is removed from the course. If two label-sequence numbers are given, the associated statements and all statements between them are removed from the course. These formats are:

delete label-sequence
delete label-sequence//label-sequence

Because the statements deleted are only flagged, but not destroyed, the space where the deleted statements resided is not available for other course material until after the proctor control word *reassemble* has been used.

If a label is deleted, all *br* instructions that refer to that label will, upon execution, cause the student to be signed off the computer automatically by CAI. If the author redefines the deleted labels at any point in the course, all *br* instructions referring to that label are adjusted automatically by CAI.

move To relocate a segment of his course from one section to another, the author types the control word *move* and three label-sequence numbers on the printer-keyboard. The first two label-sequence numbers identify the section of the course the author wants moved. The third label-sequence number indicates the block the author wants the section to follow. This format is:

move label-sequence number//label-sequence number//label-sequence number

go to To check out a specific section of his course, the author types the control word *go to* and the label or label-sequence where he wants to start. This label or label-sequence should immediately precede a *qu* or *rd* instruction. CAI proceeds in the same manner as it would when a student takes the course. This format is:

go to label-sequence

help This control word instructs CAI to display the first correct answer specified by the author to a particular course question. This control word may be used by an author only when he is checking out a course (see *go to* control word above). It also provides the label-sequence of the previous *qu* instruction so the author can determine his location in this course. CAI then proceeds to the next *rd* or *qu* instruction. This format is:

help

author This control word tells CAI that the author has finished checking his course. Any of the other author control words may now be used. The format for the *author* control word is:

author

sign off Just as the author had to *sign on* to alert CAI, he must also *sign off* to indicate he has stopped working. The format for this is:

sign off

Note: Any one of these words used alone will not be accepted by CAI as a complete student response: *help, go to, sign off, author.* This is because they are used exclusively as control words.

Student Control Words

To enable him to proceed correctly through course material and to provide the CAI program with controls for proper student performance, the student may use these four control words: *sign on, help, go to,* and *sign off.*

Like an author, a student must *sign on* to begin taking the course or continue taking the course from where he left off previously. The student, after signing on, supplies CAI with his course name and student number. The program responds with the student's name. The program then begins teaching the course where the student last left off.

While taking a course, a student may exhaust all the course support the author has included as instructions or textual material. If so, the student types *help*. The program displays the first correct answer, specified by the author, to the particular course question. The student must respond with the same answer or one of the same set before the program will continue to the next *qu* instruction.

An author may wish the student to have a vocabulary list of key words representing labels where remedial course material can be found. If the student wants to refresh his memory, he types the control word *go to* followed by the label (key word) the author has provided. The program continues at the statement associated with this label.

If the student wants to stop working with CAI, he should type *sign off* on his printer-keyboard.

Proctor Control

All initially used disk packs must be cleared with blanks. For information concerning this procedure see the Systems Reference Library publication *Disk Utility Programs Specifications for IBM 1401, 1440, 1460 (with IBM 1301 and 1311)*, Form C24-1484. Twelve control words enable the proctor to administer CAI efficiently. A proctor may use any of the printer-keyboards on the system when keying in the appropriate control data. The proctor control words are:

- *sign on proctor*
- *register author*
- *register student*
- *register recording*
- *date*
- *line*
    - *poll*
    - *status*
    - *sign off line*
    - *control*
- *remove author*
- *remove student*
- *remove recording*
- *halt*
- *reassemble*
- *sign off.*

These four request words are available with the *line* control word.

The twelve proctor control words must be typed in lower-case characters. The control words and a description of each are:

sign on proctor To begin work on a printer-keyboard, the proctor must use the control word *sign on proctor.* This control word signals CAI that what follows are control words to specify program operations that administer the system.

register author The registration of an author on the computer also registers a course at the same time. Courses are placed on disk drives specified by the proctor during the author registration routine.

The computer, during this procedure, tells the proctor how many sectors are available for the course. The number of statements specified for the course must not exceed the number of sectors available.

The author registration routine requires the drive number where the course is to be located, the course name, the number of students to be registered, the number of disk sectors required for the course, and the author's name and number.

register student The procedure followed by the proctor to register a student is similar to the one used to register an author.

The student registration routine requires the course, student responses to be placed in disk storage, and the student's name.

Seven available characters, numbers 1 through 7, designate what student responses the author wants recorded in disk storage. If none of the responses is to be stored, the proctor leaves the space in the procedure blank. This is done by pressing the space bar, which sends a blank character to the computer. The computer then types the delimiter lines and the student's name.

The characters in number form and what responses they represent are:

1	Only correct answers
2	Only wrong answers
3	Both correct and wrong answers
4	Only unrecognizable answers
5	Both correct and unrecognizable answers
6	Both wrong and unrecognizable answers
7	All – correct, wrong, and unrecognizable answers
blank	None

register recording One disk pack should be reserved for student responses. The responses to be recorded are designated during student registration by the recording option. The recording pack should be registered if a new pack is to be used or a new section on a pack already in use is to be set aside for the responses.

Registration of the recording pack is necessary unless the pack used the previous day is to be continued. This pack is already registered and need not be registered again (see section titled *Remove Recording).*

date A date routine permits the CAI program to place the current date on each of the student responses. This provides the author with a record of how the student may have answered a question on a particular day. The date is specified by giving the month, day, and year.

line Four requests are available to the proctor whenever he uses the *line* control word. They are: *poll, control, status,* and *sign off line.*

poll The proctor may poll all lines at once or he may activate them one at a time, and as many as he wants, by repeating the polling routine.

status The *status* request is used when the proctor wants to know what activity is taking place at another printer-keyboard. The status information includes the author or student record and the line constants at the point in the course where the author or student is working at the time the request is made. This information is printed out on the proctor's printer-keyboard.

sign off line The *sign off line* request is used by the proctor to sign off a printer-keyboard left on by a student or author. The proctor may *sign off* a unit from another unit.

control The *control* request is used to deactivate all lines or one line at a time. The line of the proctor is not deactivated at any time. In order for the deactivated line to be used again, the proctor must poll it.

remove author This control word enables the proctor to make both the author and his course unavailable for use by the system.

Note: The control word *reassemble* enables the proctor to re-create a course that had been removed.

remove student This control word enables the proctor to remove a student from a course.

remove recording At the end of each day, the proctor should update the disk addresses of the student responses. This is an important routine. It provides for continuous recording of sequenced addresses.

If the response recording pack is not updated, the responses recorded the following day will begin at the same address as the previous day, destroying those earlier responses as new responses are being written over them. Also, if the disk addresses are not updated, the extract and print utility program will be unable to retrieve that day's responses because the computer will not know where they are.

halt The proctor may use the *halt* control word whenever he wants to stop all printer-keyboards temporarily. When the proctor uses the control word *halt,* all lines will cease to function at the next end-of-block condition. No one is signed off the computer. To restart all units, the proctor need only press START on the console.

reassemble Reassembling a course allows a proctor to increase or decrease the disk space assigned to this course, increase the number of students assigned to this course, and eliminate deleted instructions from the course.

If necessary, the course to be reassembled may be reassembled on the same or another disk pack. The space occupied by this course on the original disk pack cannot be reused unless all other courses on the same disk pack also are moved to another one. The original disk pack then becomes a scratch pack capable of being reused.

Note: Only one course at any one time may be reassembled.

The computer, while transferring the student records from the old disk pack to the new one, types an abstract of each record on the printer-keyboard. This is an example of an abstract:

Flag	*Course*	*Statement*	*Number*	*Name*
(error indicator)	(course name)	(Label sequence number of current *qu* position)	(student's number)	(student's name)

The flag field has the following meanings:

Blank	No error
l	The statement label has been deleted.
s	The statement sequence number no longer exists.
q	The statement is not an *rd* or *qu.*

If the statement field is blank for any record, that student has not yet begun to work on the course. If a flag appears for any record, that student is reset to the beginning of the new course. The author, by instructing the student to use the *go to* control word, can reset the student properly.

At the end of a successful reassembly, the computer types: "reassembly successfully completed."

sign off Just as the proctor must *sign on* to alert the system, he must also *sign off* to indicate that he has stopped working. He need only type *sign off.*

Non-Educational Mode Operations

When courses are neither being written nor taken, a series of three utility programs assists in the efficient operation of the system. These programs are loaded into the 1440 through the IBM 1442 Card Read-Punch or into the 1401 or 1460 through the IBM 1402 Card Read-Punch under control of the Autocoder loader. The course pack to be used by the program must be on the IBM 1311 Disk Storage Drive. There are three programs:

Student Record and Course Listing This program lists the student records on the IBM 1443 or 1403 Printer. The following information is listed for each student record:

1. Student's number
2. Course name
3. Counters
4. Type of student response recordings
5. Label-sequence of *rd* or *qu* instructions where student is located in the course
6. Disk sector addresses used by CAI
7. Student's name

Extract and Print Recordings Student responses that were streamed out on a separate disk pack can be extracted and printed by this utility program when students or authors are not using the system.

Each student response that is recorded on the disk pack includes: the actual response typed by the student, the current date, the student record, the operation code that agrees with the student's response, and the label-sequence number associated with that operation code. The key used by the program to select specific responses is punched into the control cards. On any one pass, only one of the following control fields may be specified.

1. Student's number — the number that identifies the student.
2. Course name — the name of the course in which the students are enrolled.
3. *qu* identification — the label-sequence number that identifies all the responses to a particular question.
4. Response identification — all the responses to a particular *ca* or *wa*. The *ca*'s and *wa*'s are identified by a label-sequence number.
5. Operation code — the two-character identification for a particular type of response, such as *ca, wa,* or *un*.

Additional data may be obtained by extracting and writing the material on a scratch pack. This extracting may be done first on one of the above control fields and then on a second, etc. For example, suppose we wanted all the correct answers for a particular student. First, we would extract all responses by student number. Secondly, we would extract and print only the correct answers.

Update Functions This routine enables new functions to be added to the Systems pack. The Autocoder-assembled function is read through the 1442 or 1402 and loaded on the Systems pack. A control card is used to define the type of updating to be performed. The *Update Functions* routine is used to:

1. Add functions to the Systems pack.
2. Delete functions from the Systems pack.
3. Equate function names.

Course Writing and Instructional Techniques

The operation code sequences, which the author specifies when typing his course material on a terminal, and the unique student responses to that material determine the logical path that the Coursewriter program executes. The operation-code set that initiates the alternate paths was described previously under *Instruction Format*. This set of operations permits the author wide variation in his sequences of correct and wrong answer sets. He can also call on specialized functions and conditional branching.

Sample Sequences

These examples represent a few useful sequences of Coursewriter operation codes. This series of entries is a progressive illustration of Coursewriter sequence logic as it is used for various purposes. After the first example, each succeeding sample sequence adds another dimension to the response logic that an author may wish to adopt. The complete sequence is shown in each case to demonstrate clearly the advantages of this feature.

1. Suppose you want to 1) give the student a reading assignment, 2) ask him a question, 3) have the computer recognize a specific correct answer if the student gives it.

   This sequence can be written as follows:

rd	This is the reading assignment that will be typed to the student. When he signals that he has finished reading, the course continues with the following instruction.
qu	This question will be typed to the student after he finishes the reading assignment. The

computer waits for the student to transmit his reply.

ca This specific correct answer will be recognized if the student gives it.

2. You want to 1) give the student a reading assignment, 2) ask him a question, 3) have the computer recognize a specific correct answer if the student gives it, 4) type an appropriate comment ("correct.") to the student who gives the specific correct answer. This can be done as follows:

rd This is the reading assignment that will be typed to the student.

qu The question.

ca A specific correct answer.

ty "Correct." (This message will be typed to the student if he gives the answer specified by the preceding *ca.*)

3. You now want to write a sequence to 1) give the student a reading assignment, 2) ask him a question, 3) specify a correct answer, 4) type "Correct." to the student who gives the specific correct answer, 5) advance the student who answers correctly, to the next reading assignment in the course. One way to do this is to write:

rd The reading assignment.

qu The question.

ca Specific correct answer.

ty "Correct." (The message that will be typed to the student if he gives the answer specified by the preceding *ca.*)

br Next reading assignment. (Identifies the material to be presented next if the student's answer matches the preceding *ca.*)

4. Now, let's write a sequence that 1) gives the student a reading assignment, 2) asks him a question, 3) specifies a correct answer, 4) types "Correct." to the student who gives the specific correct answer, 5) advances the student, who gives the correct answer, to the next reading assignment in the course, 6) types an appropriate comment ("Wrong. Try again.") to the student who gives any unspecified answer, 7) waits for that student to transmit another reply.

rd Reading assignment.

qu Question.

ca Correct answer.

ty "Correct." (Typed to the student who gives the preceding *ca* answer.)

br Next reading assignment. (The material to be presented next if the student's answer matches the preceding *ca.*)

un "Wrong. Try again." (This message is typed to the student if he gives an unspecified answer.)

5. The following sequence 1) gives the student a reading assignment, 2) asks him a question, 3) specifies a correct answer, 4) types "Correct." if he gives the correct answer, 5) advances the student who answers correctly, to the next reading assignment in the course, 6) types "Wrong." if the student gives any unspecified answer, 7) presents the next question in the course to him.

rd Reading assignment.

qu Question.

ca Correct answer.

ty "Correct." (This will be typed if the student's answer matches the preceding *ca.*)

br Another reading assignment.

un "Wrong." (This message is typed if the student gives any unspecified answer.)

br Next question. (The material to be presented next, if the student's answer was unspecified.)

qu The next question.

6. Suppose you want to 1) ask the student a question, 2) recognize a specific correct answer, 3) tell the student who gives that answer that he is correct, 4) give the student who answers correctly, the next question in the course, 5) type "Wrong. Try again." to the student who gives any unspecified answer, 7) wait for that student to transmit another reply.

qu Question 1.

ca Correct answer.

ty "Correct."

un "Wrong. Try again."

qu Question 2.

If no branch *(br)* is written by the author, following a match on the *ca*, the "Correct." will be typed. Then the student will be given the next question in the course.

7. Now you want to 1) ask a question, 2) recognize a specific correct answer, 3) type "Correct." to the student who gives the correct answer, 4) present the next question in the course to him, 5) type an appropriate message to all students who do not give the correct answer. One way to do it is:

qu Question.

ca Correct answer.

ty "Correct."

un "Wrong. Try again."

Another way to do it:

qu Question

ca Correct answer.

ty "Correct."

nx (If the student's answer does not match the preceding *ca*, go on.)

ty "Wrong."

qu Question

The difference between the two versions is that in the first case the student is given repeated tries at the question, and in the second case the student is told "Wrong." and goes on — after his first unspecified answer.

8. Suppose you are at a point where you want to separate your students by 1) asking a question, 2) recognizing a specific correct answer, 3) presenting material "A" to the student if he gives the specified correct answer, 4) presenting material "B" to the student if he gives any unspecified answer. One way to write this is:

qu Question.

ca Correct answer.

br "A" (This identifies the material to be presented next if the student's answer matches the preceding *ca*.)

nx If the student's answer does not match the preceding *ca*.

br "B" (This identifies the material to be presented next if the student's answer does not match the preceding *ca*.)

If, in addition, you want to say "Correct." to the student who gives the specified correct answer and "Wrong." to the student who does not give that answer, you can insert the appropriate *ty*'s above or write:

qu Question.

ca Correct answer.

ty "Correct."

br "A"

un "Wrong."

br "B"

9. Next, let's 1) ask a question, 2) present material "A" to the student if he gives a specific correct answer, 3) recognize a specific wrong answer, 4) type an appropriate message to the student if he gives the specific wrong answer and then present material "B" to him, 5) present material "C" to the student if he does not give one of the specified answers.

qu Question.

ca Correct answer.

ty "Correct."

br "A"

wa Specific wrong answer that will be recognized if the student gives it.

ty "That's only a part of the answer." (This message is typed to the student if he gives the answer specified by the preceding *wa*.)

br "B" (This identifies the material to be presented next if the student's answer matches the preceding *wa*.)

nx If not.

br "C"

10. Suppose we want to 1) ask a question, 2) present material "A" if the student gives one specific correct answer, 3) present material "B" if the student gives another specific correct answer, 4) present material "C" if he gives one specific wrong answer, 5) Present material "D" if he gives another specific wrong answer, 6) present material "E" if he gives any unspecified answer. This can be done as follows:

qu

ca

br "A"

ca

```
br   "B"
wa
br   "C"
wa
br   "D"
nx                      un
            or
br   "E"                br    "E"
```

11. Suppose we want to 1) ask a question, 2) tell the student who gives a specific correct answer that he is correct and then give him the next question in the course, 3) type an appropriate message to the student who gives a specific wrong answer and then let him try to answer the question again, 4) give a "Wrong. Try again." to the student who gives an unspecified answer.

```
qu
ca
ty   "Correct."
wa
ty   "That's only a part of the answer. Try again."
un   "Wrong. Try again."
qu   Next question in the course.
```

If no branch *(br)* is written by the author, following a match on the *wa,* the message of the *ty* will be typed. The computer then waits for the student to transmit another reply to the question.

12. This sequence will 1) ask a question, 2) tell the student who gives a specific correct answer that he is correct and then give him the next question in the course, 3) type an appropriate message to the student who gives a specific wrong answer and ask him another question, 4) let him answer either the original question or the subquestion, 5) give a "Wrong. Try again" to the student who gives an unspecified answer.

```
qu
ca
ty   "Correct."
wa
ty   "That's only the first part of the answer.
     Would you like to try again?"
wa   no
br   remedial
wa   yes
ty   "All right. What's the answer?"
un   "Wrong. Try again."
qu   Next question in the course.
```

13. We now have a situation where we want to 1) present material "A" to the student who gives any one of four specific correct answers, 2) present material "B" to the student who gives any one of three specific wrong answers, 3) present material "C" to the student who gives an unspecified answer.

This could, of course, be done by writing:

```
qu   Question.
ca   Correct answer.
br   "A"
ca   Alternate correct answer.
br   "A"
```

And so on down the string of specific correct and wrong answers. However, it can be done more easily by writing:

```
qu   Question.
ca   Correct answer.
cb   Alternate correct answer.
cb   Alternate correct answer.
cb   Alternate correct answer.
br   "A"
wa   Wrong answer.
wb   Another wrong answer.
wb   Another wrong answer.
br   "B"
un                      nx
            or
br   "C"                br    "C"
```

14. Here we take the case where we want to 1) say "Correct." to the student who gives any one of three specified correct answers, 2) present the next question in the course to that student, 3) say "Wrong." to all other students, 4) present material "B" to them.

```
qu
```

```
ca
cb
cb
ty    "Correct."
un    "Wrong."
br    "B"
qu    Next question in course.
```

Since no branch is written by the author, following a match on a ca or cb, the "Correct." will be typed, following which the student will be given the next question in the course.

15. We now have a question for which we want to 1) say "Correct." if the student gives one of the specified correct answers, and give him the next question in the course, 2) say "Wrong. Try again" to the student who gives one of the specified wrong answers and let him try to answer the question again, 3) say "Wrong." to the student who gives an unspecified answer and give him material "B".

```
qu
ca
cb
ty    "Correct."
wa
wb
wb
ty    "Wrong. Try again."
un    "Wrong."
br    "B".
qu    Next question in the course.
```

Since the author did not write a branch after the wrong answer set (*wa, wb, wb, ty*), the computer will type "Wrong, Try again." and then wait for the student to give another answer.

16. Now we want to expand our treatment for the student who gives unspecified answers. 1) The first time he gives an unspecified answer, say "Wrong.", give him a mild general hint, and have him try again. 2) The second time he gives an unspecified answer, say "Wrong.", give him a stronger general hint, and have him try again. 3) The third time he gives an unspecified answer, say "Wrong.", followed by an explanation of the answer, and then give him the next item in the course.

```
qu
ca
cb
ty    "Correct."
wa
wb
ty    "Wrong." (specific hint) "Try again."
un    "Wrong." (mild general hint) "Try again."
un    "Wrong." (stronger general hint) "Try again."
un    "Wrong." (explanation of the answer)
br    Next item.
rd    Next item in the course — a reading assign-
      ment.
```

Variations in Student Answers

Figure 8 illustrates the author's original input with variations of student answers to a small portion of an actual course on statistics written by a behavioral psychologist at the Thomas J. Watson Research Center. The author's input is shown as well as the answers from four students. The experience of four different students illustrates the varied response to the course material.

STATISTICS COURSE -- ORIGINAL AUTHOR INPUT

```
    4      qu 51.  Therefore, the shape of the sampling distribution of t depends on _______.
    5      ca n
    6      cb size
    7      cb number
    8      un Remember that we have just seen that different size samples result in different
distribution curves.
    9      un Since the shape of the sampling distribution is dependent on sample size, the best
answer here is "n".
   10      br chap7 qu52
   11      (carriage return)
chap7 qu52
    1      qu 52.  Notice that the sampling distributions of t in Fig. 2 are all symmetrical,
but not normal, with a mean of ________.
    2      ca 0
    3      cb zero
    4      un If we convert our scores to standard scores, what should the mean of the
distribution be?
    5      un Reflect back to the mean of the normal curve of z-scores for a possible solution.
    6      un Because we have converted all the scores in the sampling distribution to
standard scores, the mean will be "0".
    7      br chap7 qu53
    8      (carriage return)
chap7 qu53
    1      qu 53.  The means of the sampling distributions in the previous question tend to be 0
because all the raw scores have been converted to ______scores.
    2      ca standard
    3      wa t
    4      wb z
    5      ty This answer is partially correct but a more inclusive answer would be ______
scores.
    6      un What is another name for t and z-scores?
    7      un Since t and z-scores are standard scores which result in a mean of 0 for the
distributions, the answer is ______scores.
    8      un Since t and z-scores are standard scores which result in a mean of 0 for the
distributions, the answer is STANDARD scores.
    9      br chap7 qu54
   10      (carriage return)
chap7 qu54
    1      qu 54.  Now refer to the last page of this chapter in the text.  There are two
distributions with n's of 5 and 50.  The curve based on an n of 5 is (Y/Z).
```

Figure 8. Author's Original Input with Variation of Responses from Four Students (Part 1 of 3)

STUDENT # 1

51. Therefore, the shape of the sampling distribution of t depends on _____.

area

Remember that we have just seen that different size samples result in different distribution curves.

size

52. Notice that the sampling distributions of t in Fig. 2 are all symmetrical, but not normal, with a mean of _____.

X

If we convert our scores to standard scores, what should the mean of the distribution be?

zero

53. The means of the sampling distributions in the previous question tend to be 0 because all the raw scores have been converted to _____ scores.

z

This answer is partially correct but a more inclusive answer would be _____ scores.

t and z

What is another name for t and z-scores?

deviation

Since t and z-scores are standard scores which result in a mean of 0 for the distributions, the answer is _____ scores.

standard

54. Now refer to the last page of this chapter in the text. There are two distributions with n's of 5 and 50. The curve based on an n of 5 is (Y/Z).

STUDENT # 2

51. Therefore, the shape of the sampling distribution of t depends on _____.

n

52. Notice that the sampling distributions of t in Fig. 2 are all symmetrical, but not normal, with a mean of _____.

zero

53. The means of the sampling distributions in the previous question tend to be 0 because all the raw scores have been converted to _____ scores.

t

This answer is partially correct but a more inclusive answer would be _____ scores.

t and z

What is another name for t and z-scores?

standard

54. Now refer to the last page of this chapter in the text. There are two distributions with n's of 5 and 50. The curve based on an n of 5 is (Y/Z).

Figure 8. Author's Original Input with Variation of Responses from Four Students (Part 2 of 3)

STUDENT # 3

51. Therefore, the shape of the sampling distribution of t depends on _____.

number

52. Notice that the sampling distributions of t in Fig. 2 are all symmetrical, but not normal, with a mean of _____.

0

53. The means of the sampling distributions in the previous question tend to be 0 because all the raw scores have been converted to _____ scores.

z

This answer is partially correct but a more inclusive answer would be _____ scores.

standard

54. Now refer to the last page of this chapter in the text. There are two distributions with n's of 5 and 50. The curve based on an n of 5 is (Y/Z).

STUDENT # 4

51. Therefore, the shape of the sampling distribution of t depends on _____.

area

Remember that we have just seen that different size samples result in different distribution curves.

tails

Since the shape of the sampling distribution is dependent on sample size, the best answer here is "n".

52. Notice that the sampling distributions of t in Fig. 2 are all symmetrical, but not normal, with a mean of _____.

n

If we convert our scores to standard scores, what should the mean of the distribution be?

X

Reflect back to the mean of the normal curve of z-scores for a possible solution.

0

53. The means of the sampling distributions in the previous question tend to be 0 because all the raw scores have been converted to _____ scores.

standard

54. Now refer to the last page of this chapter in the text. There are two distributions with n's of 5 and 50. The curve based on an n of 5 is (Y/Z).

Figure 8. Author's Original Input with Variation of Responses from Four Students (Part 3 of 3)

```
start
     1      rd Read Chapter 10 in your text, and when you have completed the assignment,
make sure you have understood the three major battles presented.
     2      ad +3//cl
     3      qu What major figure......
     4      ca John ........
     5      ad -1//cl
     6      wa Paul R.........
     7      ty That was a .........
     8      wa James..........
     9      wb J.........
    10      qu In what battle
    11      ca Saratoga
    12      ad  -1//cl
    13      br out one//cl//-1
    14      un This battle.........
    15      qu If the ..........
    16      ca ............
    17      br out//cl//0
    18      br out one//cl//-1
    19      nx
    20      br out two//cl//-2
```

Figure 9. One Use of Counters

Appendix

The chart in Figure 10 shows the meaningful sequences of course logic that can be used when the author is writing course material.

A		WHEN THE NEXT OPERATION CODE IS											
		rd	qu	ca	cb	ty	ad	fn	br	un	nx	wa	wb
ca or cb	Answer Agrees	x	x			x	x	x	x				///
	Answer Disagrees	x	x	x	x			x		x	x	x	///
wa or wb	Answer Agrees				///	x	x	x	x				
	Answer Disagrees	x	x	x	///			x		x	x	x	x
nx	Answer Disagrees with preceding ca, cb, wa, or wb	x	x	x	///	x	x	x	x	x	x	x	///
rd		x	x	///	///	x	x	x	x	///	///	///	///
qu		x	x	x	///	x	x	x	x	x	x	x	///
un					///	x	x	x	x				///

Upon execution of one of the operations in column "A", the legend indicates the action performed by the program on succeeding operations as specified across the top of the chart. For example, if an equal compare occurs on a ca or cb, the rd, qu, ty, ad, fr, or br Op code that immediately follows the ca or cb group is executed; but the ca, cb, un, nx, or wa that immediately follows will not be executed. A wb cannot immediately follow a ca or cb group.

Legend
/// - Invalid Op code to follow
x - Op code executed
Blank - Op code not executed

Figure 10. Course Execution Logic

Glossary for CAI

Alternate Coding Key—The key used with one of the numeric keys on the top row of the printer-keyboard to generate a special code such as the end-of-block (EOB) or cancel codes.

Author—One who writes a course for Computer Assisted Instruction and has complete control over the course content.

Block of Print—The material keyed on the printer-keyboard, starting with the operation code, up to and including the end-of-block code.

Cancel Code—The code or signal generated to cancel input on the printer-keyboard before an end-of-block code is keyed.

Card Reader—An input unit that senses and translates into internal form the holes in punched cards.

Character—A code sent to the computer when a key on the printer-keyboard is pressed. Only the alternate-coding key when pressed alone does not send a character to the computer.

Computer Assisted Instruction (CAI)—A method of allowing an author to use an IBM computer system as a means of writing and presenting instructional material individually to a number of students.

Console—A panel which contains lights, keys, switches, and related circuits for a computer system.

Control Card—A card containing information for the CAI utility programs.

Control Words—Used by the author, proctor, and student to alert the computer to specific actions they wish to perform.

Counters—A three-position storage location used with the *br* and *ad* operation codes.

Course Material—The actual contents of a course prepared by the author and presented to the student. Course material also may be called text or statements.

Course Pack—The disk pack reserved for course material.

Coursewriter—The language used by an author to write course material for the CAI operating system.

Coursewriter Instruction Sheet—The coding sheet used by an instructor on which he writes his course material with the corresponding labels and operation codes before typing the material on the printer-keyboard.

Disk Sector—A section of a disk pack containing 100 characters. One disk pack contains 20,000 sectors.

End-of-Block Code (EOB)—A signal to the computer that, in effect, tells it a block of print is complete and can now be processed.

Label—A label is used to identify course statements. It is used as an entry point into a course or a segment of a course.

Line Constants—Items of internal information used by the program to identify the current line activity.

Label-Sequence—A label and its associated sequence number.

Operation Code—Defines the action to be taken for each course statement. Operation codes consist of two characters. CAI has 12 operation codes.

Patch Card—Used to adapt the CAI program to a computer system.

Printing on the Fly—Printing that occurs while the printer-keyboard carrier is returning from the right to the left margin.

Proctor—One who operates the computer system used for CAI.

Printer—An output unit used for printing material associated with the utility programs.

Printer-Keyboard—An input/output unit used by the author, proctor, and students to communicate with the computer.

Recording Pack—The pack reserved for storing designated student responses.

Recording Option—An option designated by a number and used to tell the CAI program what student responses are to be saved and stored on disk for future reference.

Systems Pack—The disk pack on which the CAI program is stored.

Sequence Number—The number that identifies a block of print between labels.

Sign On and Sign Off—The words keyed on the printer-keyboard by the author, proctor, and student to tell the computer they wish to begin or end work with the CAI program.

Statement—See *Course Material.*

Text Time-Out Special Feature—An optional feature that permits continuous operation of the printer-keyboard.

Text—See *Course Material.*

Index

Assembler 9
Author 8
Author in Student Mode 16

Block of Print 10, 15

CAI Procedures 15
Checking Course Material 16
Computer Assisted Instruction (CAI) 5
Control Card 19
Control Words:
  Author 15
  Proctor 17
  Student 10, 16
Counters 13
Course Input 9
Course Material 10
Course Output 9
Course Statement 15
Course Writing and Instructional Techniques 19
Coursewriter Instruction Sheet 10
Coursewriter Language 10

Dating Student Responses 18
Deactivating Lines 18
Deleting Material 16
Delimiter Character 16
Disk Packs 10
Disk Storage Drives 5, 10

End-of-Block Character (EOB) 12, 14, 15
Evaluating the Student 8
Experimental Systems Equipment 5
Experimental Tool 7
Extract and Print Recordings 19

Flag Field 18
Function Routines (General) 14
Function Subroutines 13
Functional Features 9
Functions 13

Inserting New Material 15
Instruction Format 10

Label 10, 17
Line of Print 15
Line Requests 17

Machine Language Subroutine 13
Machine Requirements 6
Major Operation Codes 12
Margin Alignment 14
Minor Operation Codes 12
Monitor 9

Non-Educational Mode Operations 19

Operation Codes 10, 12

Poll Lines 18
Printer-Keyboard 9, 10
Proctor 9, 17
Program 5
Programmed Instruction 5, 9

Reassembling 18
Recording Student Responses 10
Record Keeping 13
Registration 17
Relocating Course Material 16
Remove 18
Revising a Course 9, 10, 15

Sample Sequences 19
Scrambled Textbook 6
Sequential Instructions 10
Status Information 18
Student 9
Student Control Words 10
Student Record and Course Listing 19
Student Response Recording 10
Student Responses 10, 17
Systems Pack 14

Teaching Machines 5
Temporary Halt 18
Text 10, 13
Text Formating 14
Typeout of Course Material 16

Unlabeled Statements 12
Update Functions 19
Utility Programs 10, 19

Variations in Student Answers 23

IBM 1401, 1440, or 1460 Operating System
Computer Assisted Instruction (C24-3253-1)

- Is the material:

	Yes	*No*
Easy to read?	☐	☐
Well organized?	☐	☐
Fully covered?	☐	☐
Clearly explained?	☐	☐
Well illustrated?	☐	☐

- How did you use this publication?

As an introduction to the subject ☐
For additional knowledge of the subject ☐
Studying machine operation ☐
During an actual service call ☐

- Which of the following terms best describes your job?

Customer Personnel		*IBM Personnel*			
Manager	☐	Customer Engineer	☐	Field Stock Personnel	☐
Systems Analyst	☐	Instructor	☐	Manufacturing Engineering	☐
Operator	☐	Sales Representative	☐	Manufacturing	☐
Programmer	☐	Systems Engineer	☐	Development Engineering	☐
Trainee	☐	Trainee	☐	Other ________________	
Other ____________					

- How often do you use this publication?

Often ☐ Occasionally ☐ Seldom ☐

- Comments:

Your comments help us produce better publications. Please include specific page references if appropriate. You may include your name and address if you wish.

Space is available on the other side of this page for additional comments.
Thank you for your cooperation.

C24-3253-1

Staple

Fold

Fold

FIRST CLASS
PERMIT NO. 170
ENDICOTT, N. Y.

BUSINESS REPLY MAIL
NO POSTAGE NECESSARY IF MAILED IN THE UNITED STATES

POSTAGE WILL BE PAID BY . . .

IBM Corporation
P. O. Box 6
Endicott, N. Y. 13764

Attention: Product Publications, Dept. 171

Fold

Fold

IBM®
International Business Machines Corporation
Data Processing Division
112 East Post Road, White Plains, N. Y. 10601

Additional Comments:

APPENDIX H

IBM 1440 - 1448 Operating System

Computer Assisted Instruction

Student Manual

File Number 1401/1440-48
Form C24-3385-0

IBM Systems Reference Library

IBM 1440-1448 Operating System Computer Assisted Instruction Student Manual

This publication describes the IBM 1052 Printer-Keyboard as used with the Computer Assisted Instruction Program (CAI). The publication:

1. Contains the information necessary for the student to use the printer-keyboard to receive course material from the computer.
2. Describes the standard features, operation, and cautions the student must exercise while using the printer-keyboard.

Preface

A programmed-instruction course presents instructions, questions, answers, and other information to the individual student in a carefully planned sequence (program).

A relatively new method of instruction with many of the advantages of the individual-student instruction is called *Computer Assisted Instruction* (CAI). This method allows the instructor to use the computer as a means of instructing a number of students individually.

Computer assisted instruction generally follows the pattern of programmed instruction, but represents a significant advance over previous forms of this learning concept.

The program sets up the data processing system to act as a medium between the instructor and a number of students. Both instructors and students can participate in the course at various locations (local and remote) and at various times or at the same time. With the IBM 1440 as the course processing center, an IBM 1050 Data Communications System acts as the communication link between the students and the computer.

Through CAI, the author gives each student individual instruction. He guides his students along the path best suited to each. The advanced student does not cover any material that the instructor feels is unnecessary to his progress or that might be below his level. The slow student reviews important steps that he finds difficult to understand.

As a student using CAI, you actively participate in the course and you are continuously aware of your progress. With CAI, the author can allow you to pace yourself, with the knowledge that the program will direct you at the proper time to the part of the course that best suits you.

Address comments regarding the content of this publication to IBM Product Publications, Endicott, New York 13764.
Copies of this and other IBM publications can be obtained through IBM Branch Offices.

© 1965 by International Business Machines Corporation

Contents

IBM 1052 Printer-Keyboard 5

Student Sign On 5
Student Control Words 5
Student Error Messages 5
Student Sign Off 5
End-of-Block Code 6

General Keyboard Description 6

1052 Keyboard Standard Features 6
  Keyboard Arrangement 6
  Keyboard Function Keys 6
  Key Interlock 7
  Shift Keys 7

Operation of Printer-Keyboard 7
  Tab Settings 7
  Clearing Tabs 8
  Operating Cautions 8

Error Cancellation 9

Character Cautions 9

Unseen Characters 9

Text Line Length 9

The IBM 1052 Printer-Keybord is similar to the IBM SELECTRIC® typewriter. As a student, you use it with the Computer Assisted Instruction Program (CAI) to communicate with the IBM 1440 Data Processing System (computer).

The printer-keyboard sends and receives messages as it provides rapid and dependable communication between you and the computer. This publication tells you how to operate the IBM 1052 Printer-Keyboard while using the CAI program.

Student Sign On

Before you can begin work in a course, you must *sign on* the computer. This requires you to follow a set procedure on the printer-keyboard.

The computer recognizes you by your student number which has been assigned by the author. If, however, you type a wrong number or you are not registered for the course, the computer will not recognize the number you type.

You, therefore, cannot proceed any further in the course until you either type the correct student number or you are registered.

Note: Pressing one of the function keys while typing your student number can cause the computer to reject the number (see the section titled *Unseen Characters*).

The following is an example of how to sign on the computer. Sit down at the printer-keyboard and type the words *sign on.* After the computer responds to the *sign on* signal, just follow the directions given by the computer to begin work in the course.

The typed *sign on* procedure is:

Student	*sign on*
Computer	*type course name*
Student	(type course name here)
Computer	*type your number*
Student	sxxxx (the "s" is lower case)
Computer	(the computer types your name here)
Computer	(the computer begins to present course material)

If the computer types a name other than your own, you should *sign off* immediately (see the section titled *Student Sign Off*). Then recheck the course name and student number you typed. If one or both are incorrect, repeat the *sign on* procedure, making the necessary corrections. If you cannot find out what is wrong, call the proctor.

Student Control Words

Two control words are available. They are *help* and *go to.* Use the first control word when you are unable to answer correctly a question presented by the computer. When you type *help,* the computer types the correct answer on the printer-keyboard.

You must then type the same correct answer, just as if you had answered it correctly yourself, before any more material will be presented.

Use the *go to* control word only when instructed by the author. For example, if you are proceeding through the course at a pace rapid enough for the author to think that you should skip some of the material, you can skip by using the *go to* control word.

Type this control word on the printer-keyboard as directed by the author, who also specifies the label or location at which he wants you to begin work again.

Student Error Messages

While using the printer-keyboard, you may receive error messages. The messages will be self-explanatory, and you should follow the directions as they are presented.

For example, if you type the course name as instructed by the computer and the course name is wrong, you will receive a message that there is a "course name error." You will then be asked again to "type course name."

Student Sign Off

When you finish using the printer-keyboard, *sign off* the unit before leaving. The procedure for signing off is similar to the one used to *sign on.* The typed *sign off* procedure is:

Student *sign off*
Computer *you have been signed off*

Note: You may *sign off* at any time you choose.

End-of-Block Code

Each line of input on the printer-keyboard must end with an end-of-block code (EOB). The EOB, in effect, tells the computer that the input is complete and can now be processed.

To send an EOB, press the alternate coding (ALTN CODING) key first and hold it down while you press the 5-key.

The EOB is the last character you must send to the computer from the printer-keyboard for a block of input. This means that if a line contains an error, you cannot cancel that error after you have keyed an EOB. The response may be scored wrong by the computer, and you must follow the instructions given by the computer to correct the error. You can use the cancel code (to be explained later in this publication) only *before* you key an EOB.

General Keyboard Description

The printer-keyboard is a unit for sending information to, and receiving information from, the computer (Figure 1). A single printing element, shaped like a ball, moves across the paper, and contains the entire set of characters that the printer-keyboard is capable of printing.

1052 Keyboard Standard Features

Key Arrangement

The basic arrangement of the four-bank keyboard is shown in Figure 2. The keys on the keyboard include *character* and *function* keys. The shift keys and the shift lock generate the up-shift code when pressed. When the shift keys are released, the down-shift code is generated.

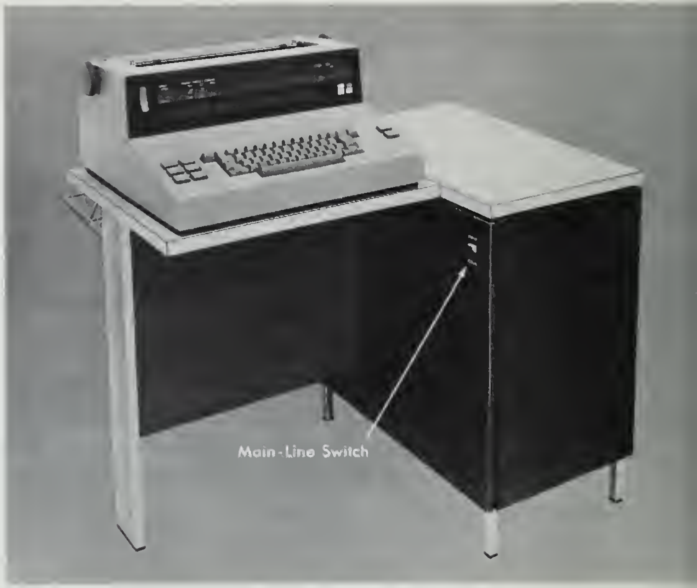

Figure 1. IBM 1052 Printer-Keyboard

Keyboard Function Keys

The keyboard function keys are:

- Space
- Backspace
- Line Feed
- Tab
- Return (returns the carrier to the left and moves the paper up for the next line to be printed)
- Shift (and Shift Lock)
- Alternate Coding

The alternate-coding key (ALTN CODING) is used with the top (numeric) row of keys. ALTN CODING does not generate a code character. Instead, while pressing and holding ALTN CODING, you can also press a key in the top row to generate the output code for a particular control function.

For example, if you press ALTN CODING and the 5-key at the same time, you generate an end-of-block (EOB) code. If you press ALTN CODING and the zero key at the same time, you generate a cancel code. These are the only two codes you will need for the CAI program. Although other control functions are available, they are not necessary.

Note: You can avoid errors while using the alternate-coding key, by pressing and holding ALTN CODING before you press one of the dual-coded numeric keys. If the numeric key is pressed first, that number, instead of the desired code, will be entered into the computer.

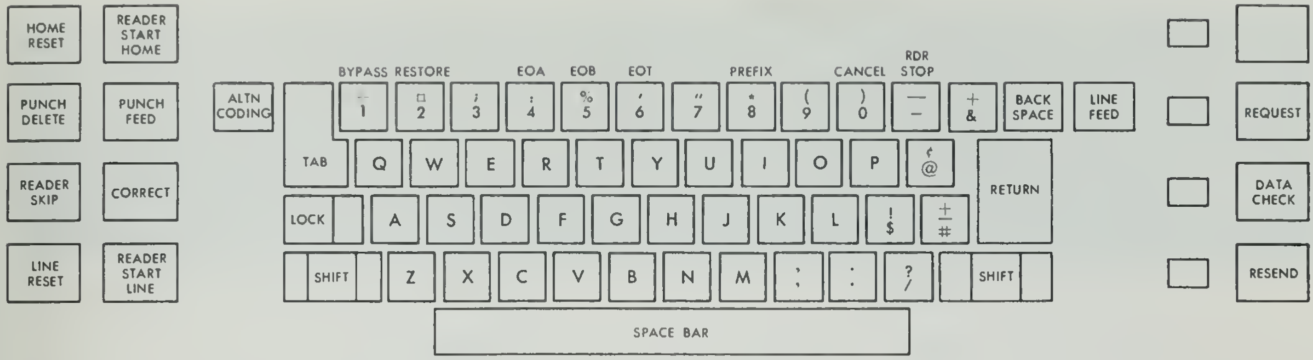
HOME RESET
READER START HOME
PUNCH DELETE
PUNCH FEED
READER SKIP
CORRECT
LINE RESET
READER START LINE
ALTN CODING
BYPASS
RESTORE
EOA
EOB
EOT
PREFIX
CANCEL
RDR STOP
1
2
3
4
5
6
7
8
9
0
+ &
BACK SPACE
LINE FEED
TAB
Q W E R T Y U I O P
¢ @
RETURN
LOCK
A S D F G H J K L
! $
± #
SHIFT
Z X C V B N M
? /
SHIFT
SPACE BAR
REQUEST
DATA CHECK
RESEND

Figure 2. IBM 1052 Keyboard

Other numeric keys may be pressed accidentally with ALTN CODING while you attempt to key an EOB. Pressing the 6-key with ALTN CODING, for example, signals an end-of-transmission (EOT) and locks the keyboard. This takes control of the printer-keyboard away from you.

Control, however, returns shortly. You receive the green light to proceed when this happens. Then press ALTN CODING and the zero key to cancel the message containing the EOT, and key an EOB. Now you can retype the material and add the proper EOB code.

If you accidentally press any of the numeric keys interlocked with the alternate-coding key, you should immediately key a cancel code followed by an EOB. You do not lose control of the printer-keyboard by pressing any of the other keys.

Key Interlock

All keys except the following are mechanically interlocked to make it impossible to press more than one key at a time:

- ALTN CODING
- RETURN and LINE FEED, with each other only
- Shift keys are locked together.

Shift Keys

Pressing either shift key generates the upper-case (capital) code. This key, when released, generates the lower-case code.

For example, pressing the shift and "G" keys produces a capital "G". Pressing the "G" key alone produces a lower-case (small) "g". Pressing the shift and "8" keys produces an asterisk. Pressing the "8" key alone produces the numeral "8".

Pressing the lock key causes the same effect as the shift key except that the shift keys remain locked. Pressing either shift key unlocks the shift keys and generates the lower-case code.

Operation of Printer-Keyboard

Before you begin to use the printer-keyboard, be sure the main-line power switch on the side of the unit is turned on (see Figure 1). The next step is to check all switches on the front panel to determine if they are in their proper positions.

Figure 3 lists the switches. Those followed by an asterisk are the most common. Your set may have fewer switches, depending upon the model and features that have been attached to your system. The switches *must* be positioned according to this list.

The switches should be set by the proctor or author or under their guidance. Do not touch the switch settings while the printer-keyboard is in use. An error in transmission could result, or you could be *signed off* the system.

Tab Settings

Set tabs on the printer-keyboard if they are required in the course (Figure 4). Use the CLR/SET lever at the left of the margin guide:

1. Position the white print-element carrier indicator on the margin guide at the point the tab is to be set.
2. Press the CLR/SET lever downward and then release it.
3. Repeat steps 1 and 2 for any other tabs that have to be set.

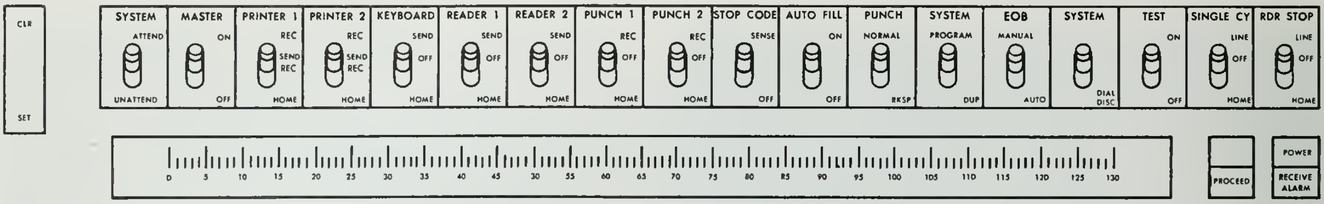
CLR
SET
SYSTEM
ATTEND
UNATTEND
MASTER
ON
OFF
PRINTER 1
REC
SEND REC
HOME
PRINTER 2
REC
SEND REC
HOME
KEYBOARD
SEND
OFF
HOME
READER 1
SEND
OFF
HOME
READER 2
SEND
OFF
HOME
PUNCH 1
REC
OFF
HOME
PUNCH 2
REC
OFF
HOME
STOP CODE
SENSE
OFF
AUTO FILL
ON
OFF
PUNCH
NORMAL
BKSP
SYSTEM
PROGRAM
DUP
EOB
MANUAL
AUTO
SYSTEM
DIAL DISC
TEST
ON
OFF
SINGLE CY
LINE
OFF
HOME
RDR STOP
LINE
OFF
HOME
0 5 10 15 20 25 30 35 40 45 50 55 60 65 70 75 80 85 90 95 100 105 110 115 120 125 130
PROCEED
POWER
RECEIVE ALARM

FRONT PANEL SWITCHES

SWITCH NAME	POSITION
System*	ATTEND (up)
Moster	OFF (down)
Printer 1*	SEND/REC (middle)
Printer 2	HOME (down)
Keyboard*	SEND (up)
Reader 1	OFF
Reader 2	OFF
Punch 1	OFF
Punch 2	OFF
Stop Code	OFF
Auto Fill	OFF
Punch	NORMAL
System	PROGRAM
EOB	MANUAL (up)
System*	(up)
Test*	OFF (down)
Single Cy	OFF
RDR Stop	OFF

* The minimol set of switches required for CAI.

Figure 3. Front-Panel Switches on the 1052 Printer-Keyboard

Clearing Tabs

The procedure for clearing tabs is similar to the method for setting them:

1. Position the white print-element carrier indicator on the margin guide at the location of the tab.
2. Press the CLR/SET lever upward and then release it.
3. Repeat steps 1 and 2 for any other tabs that have to be cleared from the printer-keyboard.

Operating Cautions

The computer signals you whenever an error occurs. The following paragraphs describe corrective action for these errors. (See Figures 2 and 3 for the locations of buttons.)

Proceed Light

The printer-keyboard accepts typing only when the green proceed light is on. If the light is off, wait until it comes on again. If the light fails to come on, call the proctor. Some systems have the Text Time-Out Suppression optional feature to permit continuous operation.

If, while you are typing, the green proceed light goes out because of too long a pause between characters, wait until it comes on again, key a cancel code followed by an EOB, and then retype your line of text.

Receive Alarm

If the receive alarm light (next to the proceed light)

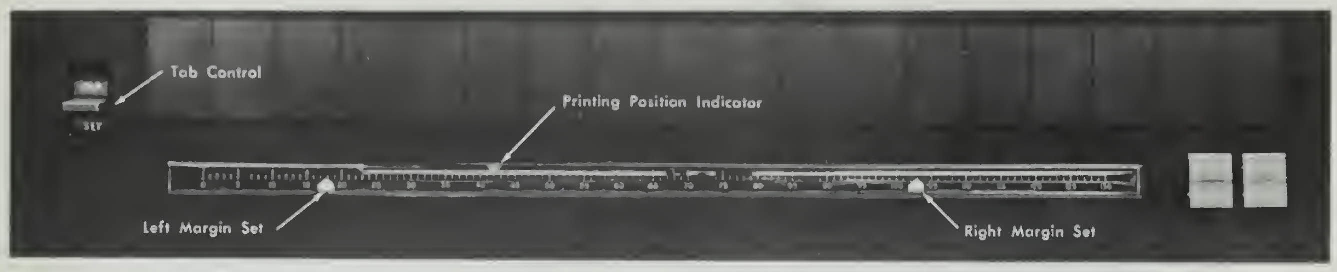

Figure 4. Margin Guide and Tab Control

blinks, the unit probably is out of paper or the paper is not holding down the white roller that closes the paper control contact.

Data Check and Resend Lights

If the data-check light or resend light comes on and remains on, press the (associated) button next to it.

Transmission Error

If the printer-keyboard types a dash (-) and the resend light comes on after a line of data has been typed, this means the program did not receive the message correctly. It must be retyped. Press the resend button before retyping the line.

Error Cancellation

If you make an error in typing, you can discard the mistake immediately after it occurs, by generating a cancel code. The cancel code tells the computer not to process this line of type.

This must be done before an EOB is keyed. Once an EOB has been keyed for a line of type, the line cannot be cancelled.

The cancel code is generated by holding down the alternate-coding key (ALTN CODING) first and then pressing the zero key. Then key an EOB. The computer will ask you to "please repeat" your entry. You can then retype the correct line.

Character Cautions

Some pairs of keys on the keyboard, like those on a typewriter, are similar when typed. Two examples are the numeral "0" and the letter "O", or the lower-case letter "l" and the numeral "1".

Because they look similar, be careful to avoid using one for the other. If you type the wrong character, even though they look similar on the paper in the printer-keyboard, it is considered a wrong answer by the computer. The computer recognizes these characters for what they are.

Unseen Characters

Be careful when typing on the printer-keyboard. Pressing some of the keys may not leave any trace on your paper, but may send characters to the computer.

The function keys, which include SPACE, LINE FEED, BACKSPACE, TAB, RETURN, and SHIFT, do not leave any marks on your paper. Each when used, however, sends a character to the computer. If they are used when they should not be used, the result may be considered a wrong answer even though it looks correct to you on your paper.

Text Line Length

The maximum number of characters that can be typed per line of text with the CAI program is 150. If you exceed this limit, the computer will reject the data as a transmission error. You must then shorten the material so that it does not exceed 150 characters.

C24-3385-0

IBM
International Business Machines Corporation
Data Processing Division
112 East Post Road, White Plains, N. Y. 10601

READER'S SURVEY FORM

IBM 1440-1448 Operating System, Computer Assisted Instruction
Student Manual (C24-3385-0)

- Is the material:

	Yes	*No*
Easy to read?	☐	☐
Well organized?	☐	☐
Fully covered?	☐	☐
Clearly explained?	☐	☐
Well illustrated?	☐	☐

- How did you use this publication?

As an introduction to the subject	☐
For additional knowledge of the subject	☐
Studying machine operation	☐
During an actual service call	☐

- Which of the following terms best describes your job?

Customer Personnel		*IBM Personnel*			
Manager	☐	Customer Engineer	☐	Field Stock Personnel	☐
Systems Analyst	☐	Instructor	☐	Manufacturing Engineering	☐
Operator	☐	Sales Representative	☐	Manufacturing	☐
Programmer	☐	Systems Engineer	☐	Development Engineering	☐
Trainee	☐	Trainee	☐	Other ______________	
Other ______________					

- How often do you use this publication?

  Often ☐ Occasionally ☐ Seldom ☐

- Comments:

  Your comments help us produce better publications. Please include specific page references if appropriate. You may include your name and address if you wish.

Space is available on the other side of this page for additional comments.
Thank you for your cooperation.

C24-3385-0

Staple

Fold

Fold

FIRST CLASS
PERMIT NO 170
ENDICOTT, N. Y

BUSINESS REPLY MAIL

NO POSTAGE NECESSARY IF MAILED IN THE UNITED STATES

POSTAGE WILL BE PAID BY . . .

IBM Corporation
P. O. Box 6
Endicott, N. Y. 13764

Attention: Product Publications, Dept. 171

Fold

Fold

IBM

International Business Machines Corporation
Data Processing Division
112 East Post Road, White Plains, N. Y. 10601

Additional Comments:

APPENDIX I

IBM 1440 - 1448 Operating System
Computer Assisted Instruction
Author and Proctor Manual

File Number 1440-48
Form C24-3384-0

IBM Systems Reference Library

IBM 1440-1448 Operating System Computer Assisted Instruction Author and Proctor Manual

This reference publication describes the IBM Computer Assisted Instruction program (CAI) for the IBM 1440-1448 Data Processing System. It describes:

1. The capabilities of the CAI program.
2. The minimum machine requirements for CAI.
3. The information necessary for the author to write course material to be presented to his students with the CAI program.
4. The operating procedures and related information for the proctor to prepare the 1440-1448 System for CAI.
5. The operating instructions and information for the author and proctor to enter material into the computing system via the IBM 1052 Printer-Keyboard.

For the titles and abstracts of associated publications, see the *IBM 1440 Bibliography*, Form A24-3005, and the *IBM Tele-processing Bibliography*, Form A24-3089.

Copies of this and other IBM publications can be obtained through IBM Branch Offices.
Address comments concerning the content of this publication to IBM Product Publications, Endicott, New York 13764.

© 1965 by International Business Machines Corporation

Contents

Computer Assisted Instruction . . . 5
Machine Requirements . . . 5
Related Information . . . 6

Author's Information . . . 7
Author's Error Messages . . . 7
Author's Sign On . . . 7
Author's Control Words . . . 7

Course Input Format . . . 7
Operation Codes . . . 7
Course Execution Sequence . . . 8
Author as Student . . . 11
Author's Sign Off . . . 11

Proctor's Information . . . 12

Initial Generation . . . 12
Clearing the Disk Packs . . . 13
Building the Systems Pack . . . 14

Daily Initialization . . . 15
Proctor Input Operation . . . 15
Proctor Sign On . . . 15
Proctor Control Words . . . 15

Initial Program Loading . . . 19

CAI Utility Programs . . . 21
Load Functions . . . 21
List Course and Student Records . . . 22
Extract and Print Recordings . . . 23
Extract and Print Headings . . . 23

IBM 1052 Printer-Keyboard . . . 25

General Keyboard Description . . . 25
Keyboard Standard Features . . . 25
Key Arrangement . . . 25
Character Cautions . . . 26
Unseen Characters . . . 26
Input to the Computer . . . 26
Error Cancellation . . . 27

Operation of Printer-Keyboard . . . 27
Operating Cautions . . . 28
Transmission Error . . . 29
System Error Messages . . . 29

Glossary . . . 30

Index . . . 32

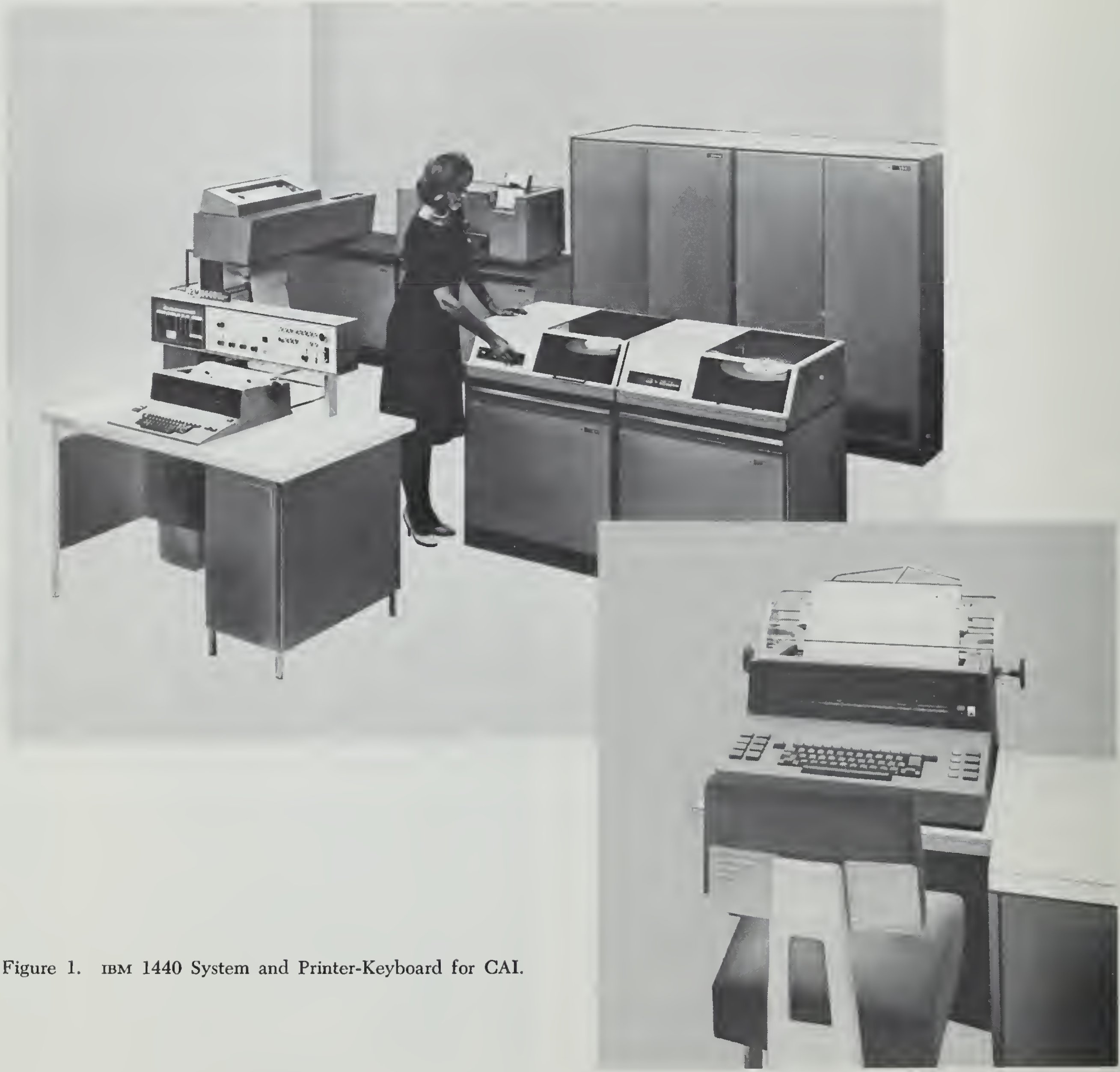

Figure 1. IBM 1440 System and Printer-Keyboard for CAI.

Computer Assisted Instruction

The Computer Assisted Instruction program (CAI) assists the author or instructor in presenting course material to his class. It also helps the student grasp the material at his own rate of speed and capabilities.

The flexibility of CAI is built into the program. The author need only follow the rules to achieve the most efficient use of CAI.

The language used in the CAI program is called *coursewriter*. The coursewriter language is not bound by or committed to any particular teaching method. The author implements his own instructional techniques or teaching methods as he writes his course. Since CAI is only an instructional tool, it provides the author with a means of automatic presentation of a course, but still enables him to retain originality in teaching.

The computer in CAI is actually a high-speed data processing system that includes several pieces of equipment (Figure 1). It is automatic only in the sense that if it receives a set of sequenced instructions, it obeys them automatically.

The instructions are given initially to the system through the IBM 1052 Printer-Keyboard. Operation of the printer-keyboard is explained in detail later in this publication (see the section titled: *Printer-Keyboard*).

Note: Throughout this publication, reference will be made to a *printer* and a *printer-keyboard*. Whenever *printer* is used, the reference will be to the IBM 1443 Printer. Whenever *printer-keyboard* is used, the reference will be to the IBM 1052 Printer-Keyboard used by the author, proctor, and student to communicate with the computer.

The CAI program causes the computer to present course material to the student and to accept his responses. The proper preparation of the computer for CAI provides these capabilities:

1. Information or questions can be typed by the CAI program to the student at the printer-keyboard. The author may specify this by using the *rd, qu, ty,* or *un* operation codes (see *Operation Codes*).
2. A student can type his response to the information on the printer-keyboard.
3. Specific responses can be anticipated and identified as correct or wrong answers. The author does this by using the *ca, cb, wa, wb,* or *fn* operation codes.
4. The action to be taken when a student gives an anticipated answer can be specified by use of the *ty, ad, br,* or *fn* operation codes.
5. The action to be taken when a student gives an unanticipated answer also can be specified with the *un* or *nx* operation codes.

Initial generation of the CAI system should be done only once. Thereafter, the proctor follows a daily set-up routine to prepare the CAI program for each day's use.

Figure 2 shows a typical 1440-1448 machine configuration for CAI. The system may include up to twelve printer-keyboards and as many as five 1311 disk drive storage units.

Machine Requirements

The IBM 1440-1448 Data Processing System used for the CAI program must have a minimum machine requirement of:

1441 A6 Processing Unit with 16,000 positions of storage with Console Attachment, Direct Seek, Disk Storage Control, Indexing and Store Address Register; Bit Test, Transmission Control Unit attachment, and Printer Attachment.

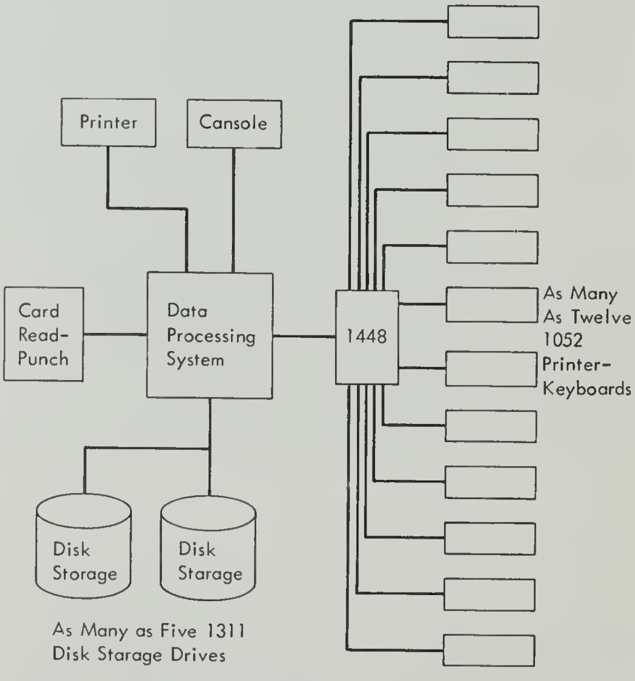
Printer
Console
Card Read-Punch
Data Processing System
1448
As Many As Twelve 1052 Printer-Keyboards
Disk Storage
Disk Starage
As Many as Five 1311 Disk Starage Drives

Figure 2. Typical 1440-1448 Computer Assisted Instruction System Configuration

1442	Card Read Punch Model 1 with Card Read Punch Adapter.
1443	Printer Model 1 with Selective Character Set and Printer Control.
1447	Console Models 1 and 4 with Sense Switches.
1311	Disk Storage Drive, one Model 1 and one Model 2 with Direct Seek feature.
1448	Transmission Control Unit Model 1 with 1050 Attachment Feature, Fixed Time-Out Feature (New Line and Line Feed, Horizontal Tab), and, as required, Line Group, Line Adapter Set, Common Carrier Adapter Set attached to lines 1 through 12. The user can also optionally specify Text Time-Out Suppression to prevent the timer from operating at the normal 9-18 second disconnect. This optional feature is to be used with the Text Time-Out Suppression on the 1051 Control Unit.
1050	Data Communication System – up to 12 systems maximum, each consisting of a 1051 Control Unit Model 2 with an "A" Terminal Identification Letter and a 1052 Printer-Keyboard with the First Printer feature. (If desired, the Text Time-Out Suppression feature can be ordered on the 1051 as a required companion to the one specified on the 1448.)

Related Information

The author and proctor should be familiar with IBM System Reference Library publications *IBM 1401, 1440, or 1460 Operating System, Computer Assisted Instruction,* Form C24-3253. The proctor also should be familiar with *Disk Utility Programs, Operating Procedures, IBM 1440-1301 and IBM 1440-1311,* Form C24-3121.

Author's Information

The author, before any work can be started on the computer by the proctor or by himself, must provide the proctor with some required information. This information should include:

- The author's name and number
- The course name
- The approximate number of statements in the course text
- The maximum number of students to be registered
- The names of the students
- The number of each student
- The recording option for each student
- The instructions for extracted student responses, if any.

This information is necessary to allow the proctor to execute the registration procedures for the course.

Author's Error Messages

While the author is using the printer-keyboard, various error messages may be printed out to him. A list of these errors and the reasons for them are given in Figure 6.

Author's Sign On

The author must *sign on* the computer before he can write or take a course. Valid signing onto the system depends on whether the author has been registered previously by the proctor. The procedure the author must follow in signing on the system is:

Author	*sign on*
Computer	*type course name*
Author	(name of course)
Computer	*type your number*
Author	axxxx
Computer	*your name is* (name of author)
Computer	*type control word*
Author	(one of the control words in Figure 3 must be used here by the author to perform the function he wants)

If the author's name printed out by the computer is incorrect, the author should *sign off* the printer-keyboard immediately. Although his number may be correct, there may be an error in registration that should be checked out before he proceeds any further.

Author's Control Words

The control words for the author are used when he *signs on* the computer to begin work on his course. Figure 3 contains a list of the control words that the author uses for specific procedures.

For a detailed explanation of the author's control words, see the IBM Systems Reference Library publication *IBM 1401, 1440, or 1460 Operating System, Computer Assisted Instruction,* Form C24-3253.

Course Input Format

When course material is put into the computer through the printer-keyboard, the author should follow the format of the Coursewriter Instruction Sheet (Figure 4). The instruction sheet contains three major sections: the *label* (or sequence number relative to the label), the *operation code,* and the *course material* or text.

In Figure 5, the space, the EOB character, and the carrier-return character (c/r) do not print. The label-sequence numbers print automatically.

On the Coursewriter Instruction Sheet, the carrier-return symbol (c/r) and the end-of-block code (EOB) are included only to show what may be done when an author writes a course if someone other than himself inputs the material on the printer-keyboard. He may also follow this procedure if he believes it will be an aid to him in keying course material on the printer-keyboard.

Operation Codes

Each operation code has a two-character identification and is used by the author in preparing his course for presentation to his students via the computer.

CONTROL WORD	BRIEF DESCRIPTION
sign on	Used when author wishes to begin working on the system.
insert after label-sequence	Used by the author when he wishes to begin or continue writing a course. Author must designate point of origin.
type label-sequence//label-sequence	Used when printout in part or all of course written by author is desired.
delete label-sequence//label-sequence	Used when author wishes to delete one or more statements from the course.
move label-sequence//label-sequence//label-sequence	Used when author wishes to move one or more statements from one location to another within the course structure.
go to label-sequence	Point in course from which author wishes to begin checking his material by becoming a student and taking the course.
help	When checking his course, the author uses this word when he wants the program to give him the correct answer to a question.
author	Used when author wants to change from the student mode back to the author mode.
end	Used when the author finishes writing a course and wants to use another control word to perform some other function.
sign off	Used when author wishes to stop working and leave the system.

Figure 3. Author Control Words.

The operation codes define the action to be performed on the third part of the course statement, which is called the text. The operation codes and their uses are explained in detail in the IBM Systems Reference Library publication *IBM 1401, 1440, or 1460 Operating System, Computer Assisted Instruction*, Form C24-3253.

The operation codes are:

rd
qu
ca
wa
un
nx
cb
wb
fn
br
ad
ty

The twelve operation codes must be typed in lowercase characters. After each operation code is typed, the author must key one space before he begins typing course material.

Since all operation codes consist of only two characters and must be typed in spaces 12 and 13, space 14 is always left blank.

Course Execution Sequence

Consider operation codes as falling under two categories: major and minor.

The major operation codes are *rd, qu, ca, cb, wa, wb, un,* and *nx*. The minor operation codes are *ty, ad,* and *br*. The *fn* operation code can be used as a major or minor operation code.

The major operation codes always will be executed in the order the author presents them in the course. The major operation codes determine the use of the minor operation codes. The use of minor operation codes therefore depends upon the successful execution of the major operation code that precedes them.

Once a major operation code has been executed successfully, all minor operation codes following it also will be executed until the next major operation code is encountered.

Whenever a *ca* or *cb* operation code is executed successfully, the program will procede to the next *rd*

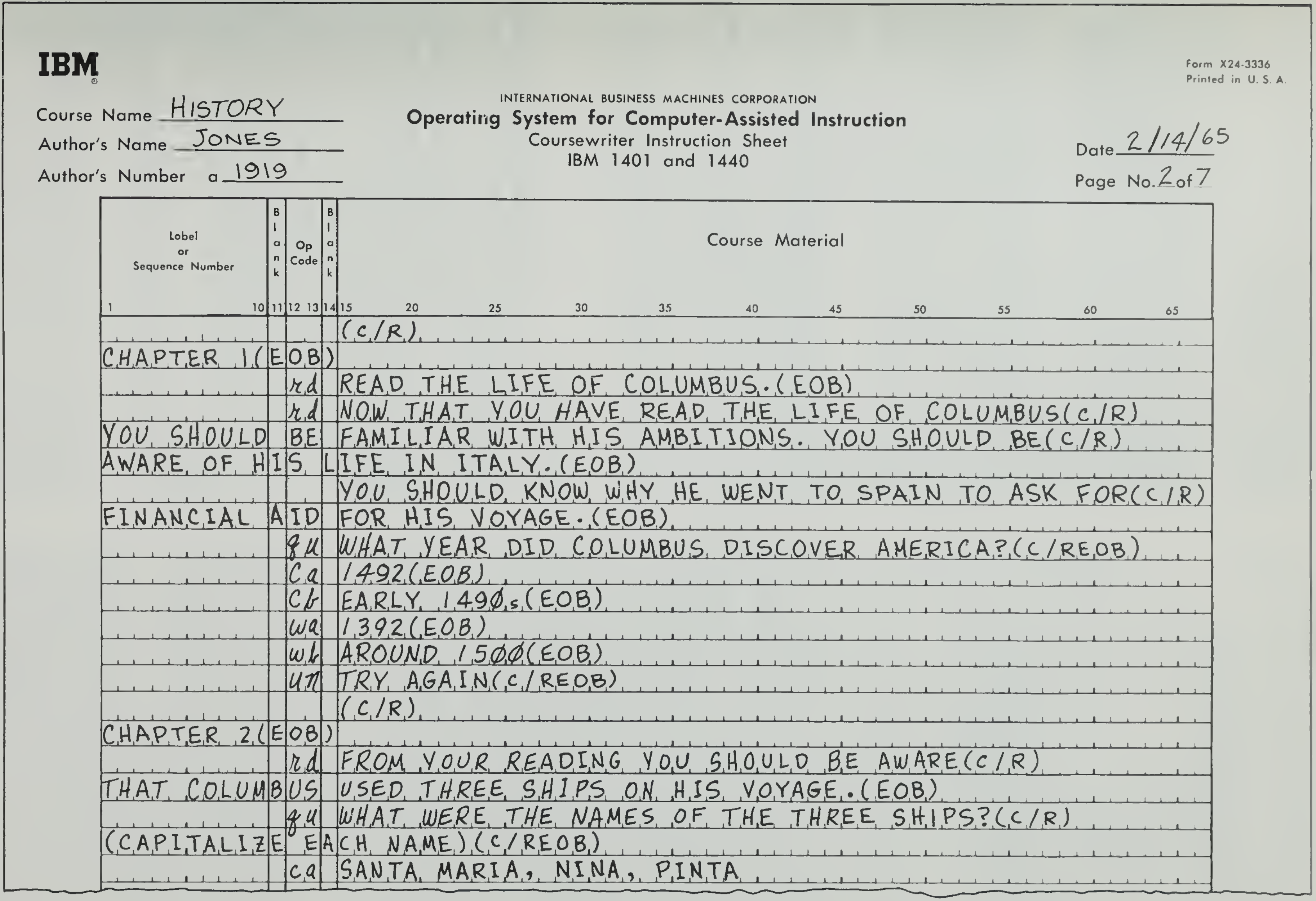

IBM

Form X24-3336
Printed in U. S. A.

INTERNATIONAL BUSINESS MACHINES CORPORATION
Operating System for Computer-Assisted Instruction
Coursewriter Instruction Sheet
IBM 1401 and 1440

Course Name HISTORY
Author's Name JONES
Author's Number a 1919

Date 2/14/65
Page No. 2 of 7

Label or Sequence Number 1 10	Blank 11	Op Code 12 13	Blank 14	Course Material 15 20 25 30 35 40 45 50 55 60 65
				(c/R)
CHAPTER 1(	E	OB	)	
		rd		READ THE LIFE OF COLUMBUS.(EOB)
		rd		NOW THAT YOU HAVE READ THE LIFE OF COLUMBUS(c/R)
YOU SHOULD		BE		FAMILIAR WITH HIS AMBITIONS. YOU SHOULD BE(c/R)
AWARE OF H	I	S	L	IFE IN ITALY.(EOB)
				YOU SHOULD KNOW WHY HE WENT TO SPAIN TO ASK FOR(c/R)
FINANCIAL	A	ID		FOR HIS VOYAGE.(EOB)
		qu		WHAT YEAR DID COLUMBUS DISCOVER AMERICA?(c/REOB)
		ca		1492(EOB)
		cb		EARLY 1490s(EOB)
		wa		1392(EOB)
		wb		AROUND 1500(EOB)
		un		TRY AGAIN(c/REOB)
				(C/R)
CHAPTER 2(	E	OB	)	
		rd		FROM YOUR READING YOU SHOULD BE AWARE(c/R)
THAT COLUM	B	US		USED THREE SHIPS ON HIS VOYAGE.(EOB)
		qu		WHAT WERE THE NAMES OF THE THREE SHIPS?(c/R)
(CAPITALIZ	E	E	A	CH NAME)(c/REOB)
		ca		SANTA MARIA, NINA, PINTA

Figure 4. Typical Author Entry on Coursewriter Instruction Sheet.

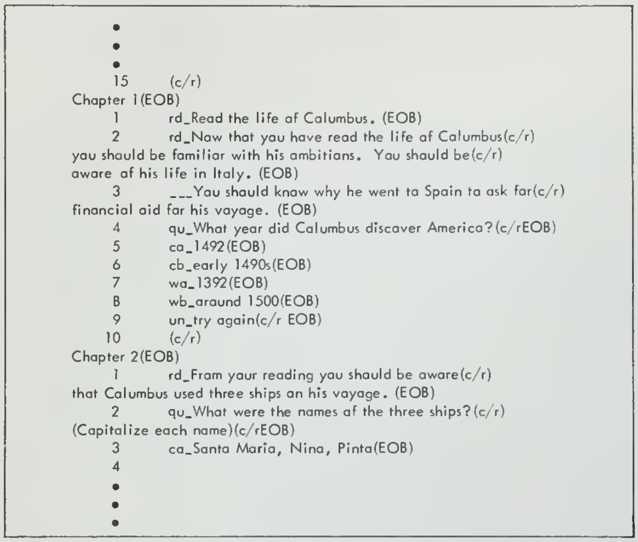

```
        •
        •
        •
        15      (c/r)
Chapter 1(EOB)
        1       rd_Read the life of Columbus. (EOB)
        2       rd_Now that you have read the life of Columbus(c/r)
you should be familiar with his ambitions.  You should be(c/r)
aware of his life in Italy. (EOB)
        3       ___You should know why he went to Spain to ask for(c/r)
financial aid for his voyage. (EOB)
        4       qu_What year did Columbus discover America?(c/rEOB)
        5       ca_1492(EOB)
        6       cb_early 1490s(EOB)
        7       wa_1392(EOB)
        B       wb_around 1500(EOB)
        9       un_try again(c/r EOB)
       10       (c/r)
Chapter 2(EOB)
        1       rd_From your reading you should be aware(c/r)
that Columbus used three ships on his voyage. (EOB)
        2       qu_What were the names of the three ships?(c/r)
(Capitalize each name)(c/rEOB)
        3       ca_Santa Maria, Nina, Pinta(EOB)
        4
        •
        •
        •
```

Figure 5. Typical Author Entry on Printer-Keyboard.

or *qu* operation code after executing all minor operation codes as associated with that particular *ca* or *cb.*

When a *wa, wb,* or *un* operation code is executed successfully, the program will return to a point in the course associated with the first major operation code following the current *qu* operation code. The program then waits for the student to reply again to that *qu.*

The successful completion of the *rd, qu,* or *nx* operation codes permits the execution of all minor operation codes that follow them. The next major operation code also is executed. The execution sequence of these minor operation codes may be altered by the use of the *br* instruction.

Whenever a *ty, un, rd,* or *qu* operation code is executed successfully, the last response from the student is destroyed.

Labels

The label is used as an entry into the course. It consists of one to ten characters. The only restriction in the use of characters is that a label may never contain a slash (/) or a dash (—). The label, depending on its length, must be typed in spaces 1 through 10 as shown in the instruction sheet.

The label allows unique identification of a block of print. The author may use as many as he wishes. It is used only in a *branch* instruction. For example, if the author wishes to have his students skip to material in another part of his course, he may issue a *branch* instruction to that location, which is identified by a label.

Statements immediately following each label are numbered sequentially and automatically by the CAI program, beginning with 1.

The author may define a label by pressing the carrier return key on the printer-keyboard when he is in the operation code field, typing the label in and keying an end-of-block code (EOB). The program will return the carrier, print the number "1" in the label field, and space to the operation code field. Each block of print is numbered sequentially, by the program, up to the next label.

When the author receives a number for the next course statement and he wants to insert a label, he returns the carrier to the left margin, and types in his label and an end-of-block code (EOB). The program will return the carrier, begin sequential numbering again with 1, and the author can then add more course material.

The label sequence number associated with a label can never be used in a branch instruction. Branching can be done only to a label.

The label-sequence number, as well as the label, may be used as the text of author control words such as *delete* and *insert after.*

Note: When typing a label and its associated sequence number, separate them by a dash (—).

Textual Material

Each course material statement may contain up to 150 characters, including the EOB code. The material may be in various forms.

It may be instructions or questions to the student, predicted correct or wrong answers from the student, labels to determine the order in which the course material is to be presented, counters or names, and operands of functions.

If a course statement is longer than 150 characters, the author must key an EOB before he exceeds the maximum number of allowable characters. The carrier is returned automatically, the next sequence number is printed, and the carrier moves to the operation-code field.

At this point, the author continues the course statement by keying three spaces and typing his material.

The author, to align the left margin of the printed material, writes his material in a specified manner. For a *qu, rd, ty,* or *un* operation code, if the author wants the carrier returned so that the next response typed by the student will be at the left margin, he ends the text with a carrier return and an EOB.

For a *ca, cb, wa, wb, br, ad, fn,* or *nx* operation code, only an EOB is necessary. When the author is writing the course, the program causes a carrier-return and line-feed operation automatically after each block of print.

When a student is taking a course, he ends each response with an EOB. Either the author returns the carrier when the text of a *qu, rd, ty,* or *un* is typed, or the program returns the carrier after the response from the student.

This allows the first response from a student to follow on the same line as the question or instructions of the course if the author omits the carrier return from the end of the text.

Author as Student

The author can check the contents of his course by using the *go to* control word. This signals the computer that the author wishes to become a student. The computer then begins to present course material, starting at the label or label-sequence number specified with the *go to* control word.

To return to his author status, the author types the control word *author*.

Carrier Return Printing

Computers without the Fixed Time-Out special feature sometimes cause printing problems when material is being presented to the student.

For example, after a line of print has been typed on the student's printer-keyboard and the carrier is being returned to the left margin, letters may print at widely spaced intervals while the carrier is returning. This is sometimes called "printing-on-the-fly."

Up to 150 characters are allowed for each block of print, beginning with the first character of the text and including the EOB code. Pressing any key on the printer-keyboard, with the exception of the alternate-coding key when pressed alone, sends a character to the computer and is counted among the 150 allowable characters.

Therefore, to avoid printing while the carrier is returning to the left margin, the author may treat each line of course material that he types as a block of print. He does this by keying a carrier return and an EOB, in this order, after each line that he types.

The next sequence number is printed and the carrier moves to the operation code field automatically. The author continues his course material by spacing three times over the operation code field and begins typing.

Author's Sign Off

When the author has finished his work on the printer-keyboard, he should *sign off*. This is one of his control words. He types *sign off* on the printer-keyboard. The computer will acknowledge his request by responding "you have been signed off."

MESSAGES	REASON
disk full	Disk capacity for course material exceeded.
first label error	Error in specifying first label while using delete control word.
first sequence number error	Error in specifying first sequence number while using delete control word.
second label error	Error in specifying second label while using delete control word.
second sequence number error	Error in specifying second sequence number while using delete control word.
system error in delete label	Program unable to delete material requested for deletion.
author control word error	Wrong control word used.
label limits error	Invalid set of label limits while using the move, delete, or type control words.
label error	Wrong label encountered during course print-out.
sequence number error	Sequence number associated with label incorrect.
course name error	Invalid course name or disk pack with course not on line.
author number error	Incorrect author number typed.
invalid op code	Wrong operation code used. The operation code must always include two characters and a space. See Operation Codes for list of valid operation codes.
multi-defined label	Some label used more than once.

Figure 6. Error Messages on 1052 Printer-Keyboard while Author is using the Computer.

Proctor's Information

The Computer Assisted Instruction program (CAI) for the IBM 1440 Data Processing System is an educational tool that permits an instructor to use the computer as a means of disseminating instructional material to students individually.

The CAI program resides in disk storage. A computer operator or *proctor,* as we shall call him in this publication, stores the program on disk only once. Thereafter, according to his plan of operation, the computer is initialized daily to prepare for the use of CAI.

The proctor must follow certain rules during the operation of the computer and the IBM 1052 Printer-Keyboard (an input/output unit used to communicate with the computer).To avoid errors and achieve maximum efficiency, follow these rules as they are outlined in this publication.

For example, special control cards are required from the proctor at various stages of preparation for the CAI program. The formats of these cards are given. If the format is incorrect, the computer will halt and an error message will be printed on the printer.

The proctor, before he begins any registration procedures, will need some information from the author. This information includes:

1. *The course name and estimated number of statements expected to be in the course.* The course name should not exceed eight characters. The number of statements in a course should not exceed the number of disk sectors available for the material on the pack.
2. *The author's name and number.* The author's number should be preceded by a lower case "a" and followed by four numerals. The author's name must not exceed 22 characters.
3. *The maximum number of students to be registered at any one time.*
4. *The names of the students and their individual numbers.* Each student's number should be preceded by a lower case "s" and followed by four numeric digits. The student's name should not exceed 22 characters.
5. *The recording option for each student.* The recording option, which specifies which student responses are to be recorded in disk storage, is specified when the student is registered.
6. *Instructions from the author on what is to be done with the student responses extracted from disk storage and the type of sorting to be done with those responses.*

Initial Generation

The initial generation of the CAI program requires the proctor to clear the disk storage area to be used for the program supplied by IBM. This disk area is located on what is known as the Systems pack. To clear the Systems pack, the proctor must use the disk utility program. The utility program is not provided with the CAI package, but can be ordered from IBM.

Four decks of object cards are supplied by IBM to enable the proctor to prepare the computer for CAI. The decks, as shown in Figure 7, include:

1. *The Systems deck.* This deck contains the control program and the load program that places the CAI program into disk storage.
2. *The Computer Assisted Instruction functions deck.* This deck contains the various functions or subroutines necessary to execute various parts of CAI..

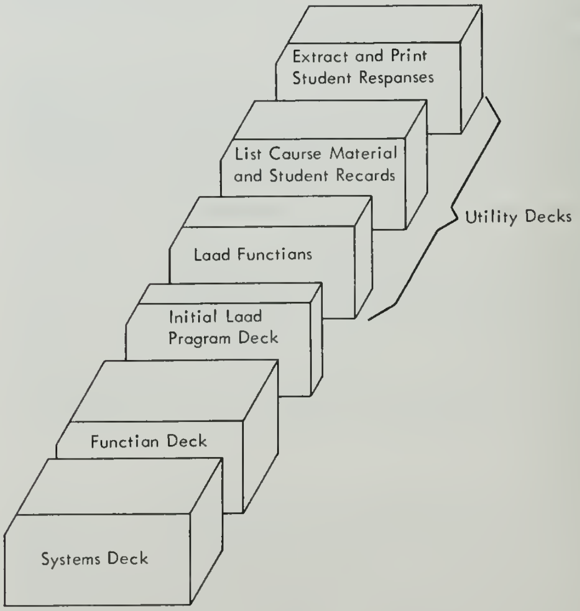
Extract and Print Student Responses
List Course Material and Student Records
Utility Decks
Load Functions
Initial Load Program Deck
Function Deck
Systems Deck

Figure 7. Initializing Object Decks.

3. *The Initial Load Program deck.* This deck is used daily to initialize the CAI program.
4. *Utility decks.* These decks contain the programs that load the functions on the Systems pack, list course material and student records on the printer, and extract and print student responses.

When fewer than 12 lines are installed on the IBM 1448 Transmission Control Unit, the proctor must prepare three patch cards to adapt the CAI program to the system configuration. Place the patch cards immediately in front of the last card of the Systems deck. If fewer than 12 lines are installed and these patch cards are omitted, the computer will come to a 1448-process-error halt.

The patch card formats are:

Card 1

Columns	*Contents*
1	W
2	6
3	5
4	0
5	7
6	Word separator (0-5-8)
7	A comma (,)
8-13	Punch the contents of columns A and B in Figure 8 according to the number of lines in the system.
14-80	Blank

Columns 8-13 should be punched this way: If six lines are to be used in the system, punch the contents of line 6 under A and B in Figure 8.

Card 2

Columns	*Contents*
1	W
2	7
3	2
4	0
5	7
6	Word separator (0-5-8)
7	M
8	U
9	2
10	9
11-13	Punch the contents of Column A in Figure 8 according to the number of lines in the system.
14-80	Blank

Card 3

Columns	*Contents*
1	W
2	7
3	9
4	0
5	7
6	Word separator (0-5-8)
7	M
8	U
9	2
10	9
11-13	Punch the contents of column B in Figure 6 according to the number of lines in the system.

NUMBER OF 1448 LINES	COLUMN A	COLUMN B
1	H10	H11
2	H20	H21
3	H30	H31
4	H40	H41
5	H50	H51
6	H60	H61
7	H70	H71
8	H80	H81
9	H90	H91
10	100	101
11	110	111

Figure 8. Patch Card Data.

When preparing cards 2 and 3, the same procedure should be followed as for card 1. The main difference is that only the contents of one column in Figure 8 are used. For example, in card 2, the contents of line 6 in column A are punched into the card if there are six lines to be used. For card 3, use the contents of column B.

Clearing the Disk Packs

Two specially designed control cards are prepared and placed behind the Clear Disk Utility program to clear storage on the Systems pack and prepare it to receive the CAI program. These cards must be punched as shown here to clear the pack properly.

The formats of these cards are:

Card 1

Columns	*Contents*
1-15	M00000000001900
16-20	Blank
21-35	L00002000019900
36-40	Blank
41-55	M00020000021900
56-80	Blank

Card 2

Columns	*Contents*
1-15	L00022000099900
16-20	Blank
21-35	M00100001999900
36-80	Blank

Only one control card is necessary for clearing storage on the course packs and recording pack. This card is placed behind the clear-disk utility program cards. The format for this card is:

Columns	*Contents*
1-13	M000000019999
14	0, 2, 4, 6 or 8, depending on which disk drive has the pack to be cleared.
15	0
16-80	Blank

Building the Systems Pack

Each disk drive on-line in the system is numbered. There must be at least two, but as many as five may be used. To build the Systems pack preparatory to using the CAI program, the proctor must take these steps:

1. Place the Systems pack on disk drive 0.
2. Set the write-disk switch, the check-stop switch, and sense switch A on.
3. Set all other switches off.
4. Press CHECK RESET, START RESET, 1448 CHECK RESET, and 1448 START RESET.
5. Place the Systems deck in the card reader.
6. Load the systems deck by pressing START on the card reader and PROGRAM LOAD on the console.

When the computer attempts to read the last card, press START on the reader. After the last card has been read, remove the deck from the card reader.

Note: As a precautionary measure, remove all cards from the card reader after they have been read and returned to their original storage location. This prevents loss, damage, and mixing with other cards that may be processed later.

While building the Systems pack, the computer may halt normally or an error may cause it to stop. The STOP button on the console will always light up when the computer halts, but it will give no indication or reason for the halt. The proctor, therefore, should press the A- and B-address register buttons to determine the type of halt. These buttons should be pressed one at a time.

The proctor will receive a number on the storage address register on the console. The numbers shown for each register can be compared to those in the chart in Figure 9 to determine whether the system stopped normally or because of an error.

For example, if the numbers shown when the A-address register button is pressed is 777 and the same number appears in the B-address register, the proctor will know the computer came to a normal halt.

To restart the computer after an error halt, the proctor should press START on the console. If the same halt recurs, all switches should be checked to determine if they are in the right positions as outlined in this publication.

A-ADDRESS REGISTER	B-ADDRESS REGISTER	WHEN HALT WILL OCCUR
222	222	When trying to write Systems Control program on Systems pack.
333	333	While trying to clear function area on Systems pack.
444	444	Read error when initializing the pack record.
555	555	Write error when writing the pack record.
666	666	Write error while initializing the functions table area on the Systems pack.
777	777	Normal Halt.

Figure 9. Error Halts while Building the Systems Pack

Loading the Functions

A special deck of cards called the Load Function deck is used to load into disk storage the functions necessary for the CAI program. The Load Function deck is placed first into the card reader. Behind this deck, the proctor should place the deck of functions.

Before starting, the proctor should press START on the printer to prepare it for printing messages. He should then follow these steps:

1. Press CHECK RESET, 1448 START RESET, 1448 CHECK RESET, and START RESET on the console.
2. Press START on the reader.
3. Press PROGRAM LOAD on the console.

The computer will load the functions into disk storage. The reader will stop when it attempts to read the last card. Press START on the card reader, and the last card will be read.

After the last card has been read, the computer halts and a message prints on the printer, telling the proctor the functions have been properly loaded on disk. While the functions are being loaded, any errors that may occur will be detected and written out on the printer. This list contains the possible error messages that can occur and are printed on the printer while loading the functions or making changes to functions already in storage:

function control card error
delete function entry not in function area
delete table entry not in table
function already in sector xxxxxx
add table entry already in function table
function table full
equated function not in table

The job of building the Systems pack and loading the functions, although not a lengthy process, is done only once unless it must be enlarged or rebuilt.

The total time for this procedure, including the time to clear the Systems pack, is approximately 10 to 12 minutes.

Daily Initialization

Each day the computer is used for CAI, the proctor must follow a daily initialization routine to prepare it for a new day's work. The procedure to be followed is:

1. Place the Systems pack on disk drive 0. All course packs and the one recording pack for student responses should be placed on other drives that are to be used that day.
2. Set the write-disk switch, check-stop switch, and switch A on.
3. Set all other switches off.
4. Press CHECK RESET, START RESET, 1448 CHECK RESET, and 1448 START RESET.
5. Place the Initial Load Program deck in the card reader. This deck will load the CAI program from disk storage into core storage.
6. Press START on the card reader and PROGRAM LOAD on the console.

The card reader will stop when is attempts to read the last card. Press START on the card reader to read the last card. Only one possible error can occur. This halt, if it happens, will occur while the program is being read from disk storage into core storage. If this halt occurs, both the A- and B-address registers will contain the number 111. The proctor should recheck all switches to determine if they are in the correct positions. If the equipment is not the source of the halt, the fault probably is in the Systems pack. The proctor should rebuild his Systems pack.

Polling Line 1

When the CAI program is moved from disk storage into core storage, the initial load program is designed so that it will branch to the initializing routine, and line 1 is polled or activated.

At this point, the proctor should know what is to be done that day before anyone is allowed to do any course work on the computer. He should know:

1. If student responses are to be dated as they are recorded.
2. What recording pack or sectors on the recording pack are to be registered.
3. If any authors are to be registered on the computer.
4. What students, if any, are to be registered on the computer.

Proctor Input Operation

The proctor must use the printer-keyboard when keying control data into the computer for the CAI program.

Eleven control words are available to the proctor. They are signals to the computer that specify the operations that administer the system. These control words are keyed on the printer-keyboard.

The printer-keyboard and its operation are explained in detail later in this publication (see *Printer-Keyboard*). Proctor error messages may be printed on the printer-keyboard while the proctor is working at the unit. Figure 10 contains a list of these messages and the reasons for them.

Proctor Sign On

The proctor, before he is able to use the computer to perform any of his duties, must *sign on*. The procedure for this is:

Proctor: *sign on proctor*
Computer: *type control word*

Proctor Control Words

The proctor has a choice of 11 control words. The one he selects depends on the job that he wants to do. These control words are:

register author
register student
register recording
date
line
remove author
remove student

remove recording
reassemble
halt
sign off

Four requests are available to the proctor whenever he uses the *line* control word. They are: *poll, control, status,* and *sign off line.*

Register Author

The registration of an author on the computer also registers a course at the same time. Courses are placed on disk drives specified by the proctor during the author-registration routine. The computer, during this procedure, tells the proctor how many sectors are available for the course. The number of statements specified for the course must not exceed the number of sectors available.

This is an example of how the author and a course should be registered:

Proctor	*register author*
Computer	*type drive number*
Proctor	2 (If this is the drive on which he wishes to place the course.)
Computer	(number of sectors available is written here)
Computer	*type course name//course sectors//students*
Proctor	(course name)//(sectors for course)// (number of students)
Computer	*type number//name*
Proctor	axxxx//(author's name)
Computer	*registration finished*
Computer	*type control word*

Name Length

The maximum number of characters allowed for the name of an author or a student is 22. This number includes all characters that are sent to the computer when a name is typed.

All letters in a name are counted as characters in addition to those characters generated when such printer-keyboard functions as downshift, upshift, and space are used.

Failure to count these characters could result in a name that exceeds the maximum number of characters allowed (see the section titled *Unseen Characters*).

Register Student

The procedure followed by the proctor to register a student is siimlar to the one used to register an author.

The student registration routine specifies the course, student responses to be placed in a disk storage, and the student's name.

This is an example of how a student should be registered for a course:

Proctor	*register student*
Computer	*type course name*
Proctor	(type course name here)
Computer	*type student number//recording option// student name*
Proctor	sxxxx//(number of recording option)// (student's name)
Computer	*registration finished*
Computer	*type control word*

The proctor should repeat this procedure for each student to be registered. He may do this by typing *register student* as the next control word.

Recording Options

Seven available characters, numbers 1 through 7, designate what student responses the author wants recorded in disk storage. If none of the responses is to be stored, the proctor leaves the space in the procedure blank. This is done by pressing the spacebar, which sends a blank character to the computer, and then typing the delimiter lines and proceeding to type the student's name.

The characters in number form and the responses they represent are:

1	Only correct answers
2	Only wrong answers
3	Both correct and wrong answers
4	Only unrecognizable answers
5	Both correct and unrecognizable answers
6	Both wrong and unrecognizable answers
7	All—correct, wrong, and unrecognizable answers
blank	none

Register Recording Pack

One disk pack should be reserved for student responses. The responses to be recorded are designated during student registration by the recording option. The recording pack should be registered if a new pack is to be used or a new section on a pack already in use is to be set aside for the responses.

Registration of the recording pack is necessary unless the pack used the previous day is to be continued. This pack is already registered and need not be registered again (see *Remove Recording*).

Two procedures are available for registering a recording pack, depending on whether it is a new pack or a new section in an existing pack. The procedures are:

New Pack

Proctor	*register recording*
Computer	*type drive number//start sector//last sector*
Proctor	2 (If only the disk drive number is specified, the entire pack will be reserved for student responses)
Computer	*registration recording finished*
Computer	*type control word*

New Pack Section

Proctor	*register recording*
Computer	*type drive number//start sector//last sector*
Proctor	*2//1346//2347* (if these are the sector limits desired)
Computer	*registration recording finished*
Computer	*type control word*

Note: The sector limits should be used with caution to prevent the destruction of information stored on the disk pack in the sector specified.

Date Student Responses

A date routine permits the CAI program to place the current date on each of the student responses. This provides the author with a record of how the student may have answered a question on a particular day.

This is the procedure for entering the date into the computer:

Proctor	*date*
Computer	*type*
Computer	*month//day//year*
Proctor	11//25//65
Computer	*date finished*
Computer	*type control word*

Line

Four kinds of requests are available to the proctor whenever he uses the *line* control word. They are: *poll, control, status,* and *sign off line.*

Poll

The proctor may poll all lines at once or he may activate them one at a time, and as many as he wants, by repeating the polling routine. Here are two examples of how the proctor polls the other lines.

The first example polls all units at once. The second example polls only one line.

Example 1

Proctor	*line*
Computer	*type request*
Proctor	*poll*
Computer	*type line number*
Proctor	*all*
Computer	*poll finished*
Computer	*type control word*

Example 2

Proctor	*line*
Computer	*type request*
Proctor	*poll*
Computer	*type line number*
Proctor	*3*
Computer	*poll finished*
Computer	*type control word*

When the computer asks the proctor to *type control word* at the end of example 2, he should type *line* if he wants to continue activating lines. He should repeat this procedure until all lines that he wants polled are put into service for that day.

Control

The *control* request is used to deactivate all lines or one line at a time. The line of the proctor can not be deactivated at any time. For the deactivated line to be used again, the proctor must poll it.

This is an example of how all lines are deactivated when the *control* request is used:

Proctor	*line*
Computer	*type request*
Proctor	*control*
Computer	*type line number*
Proctor	*all*
Computer	*control finished*
Computer	*type control word*

This is an example of how the *control* request is used to deactivate one line:

Proctor	*line*
Computer	*type request*
Proctor	*control*
Computer	*type line number*
Proctor	2
Computer	*control finished*
Computer	*type control word*

Note: If your system is equipped with the Text Time-Out Suppression optional feature, the *control* request should not be used.

Status

The *status* request is used when the proctor wants to know what activity is taking place at an other printer-keyboard. The status information includes the author or student record and the line constants at the point in the course where the author or student is at the time the request is made. This information prints on the proctor's printer-keyboard.

For example, if an author or student is encountering some kind of difficulty with the course, the proctor, with this request, may determine (from a print-out of the record and constants) the origin of the problem.

This is an example of the procedure for the *status* request:

Proctor	*line*
Computer	*type request*
Proctor	*status*
Computer	*type line number*
Proctor	2
Computer	(constants and record are printed here)
Computer	*status finished*
Computer	*type control word*

Sign Off Line

The *sign off line* request is used by the proctor to *sign off* a printer-keyboard left on by a student or author. The proctor may *sign off* a unit from another unit. This is an example of how he can use the *sign off line* request:

Proctor	*line*
Computer	*type request*
Proctor	*sign off line*
Computer	*type line number*
Proctor	2
Computer	*sign off line finished*
Computer	*type control word*

Note: This procedure does not deactivate the line.

Proctor Sign On

When the proctor is finished with the initializing routines, he should *sign off* the computer. The computer will acknowledge his request with "you have been signed off." The computer is now ready for use by both authors and students.

Remove Author

The procedure for removing an author and course from the computer is one and the same. Whenever an author or course is removed from disk storage, this example of the routine should be followed:

Proctor	*remove author*
Computer	*type course name*
Proctor	*algebra*
Computer	*type author number*
Proctor	axxxx
Computer	*author remove finished*
Computer	*type control word*

Remove Student

At the end of the course or if the student drops out of a course, his records should be removed from the disk files. This is an example of how a student should be removed from the course:

Proctor	*remove student*
Computer	*type course name*
Proctor	*algebra*
Computer	*type student number*
Proctor	sxxxx
Computer	*student remove finished*
Computer	*type control word*

Halt

The proctor may use the *halt* control word whenever he wants to stop all printer-keyboards temporarily. When the proctor uses this control word, all lines cease to function at the next end-of-block condition. No one is signed off the computer. To restart all units, the proctor need only press START on the console. This is an example of the halt procedure:

Proctor	*halt*
Computer	*type control word*

Note: The stop button on the console should never be used to halt the computer or printer-keyboard while they are in use.

Remove Recording

At the end of each day, the proctor should update the disk addresses of the student responses. This is an important routine. It provides for continuous recording of sequenced addresses.

If the response recording pack is not updated, the responses recorded the following day will begin at the same address as the previous day, destroying those earlier responses as new responses are being written over them. Also, if the disk addresses are not updated, the extract and print utility program will be unable to retrieve that day's responses because the computer will not know where they are.

This is the procedure for removing the response recording by updating the disk addresses:

Proctor	*remove recording*
Computer	*remove recording finished*
Computer	*type control word*

Reassemble

Reassembling a course allows a proctor to increase or decrease the disk space assigned to this course, to change the number of students assigned to this course, and to eliminate deleted instructions from this course.

If necessary, the course to be reassembled can be moved to another disk pack. The space occupied by this course on the original pack cannot be reused unless all other courses on the same disk pack also are moved to the new disk pack. The original disk pack then becomes a scratch pack capable of being reused after it has been cleared (see *Clearing the Disk Packs*). Note: only one course at any one time may be reassembled.

The steps to be followed for reassembling are:

1. Register author on new disk pack (see *Register Author*).
2. Reassemble the course.

In step 1, always use the same course name and author number that were used in the original course registration.

This is an example of how the proctor makes a request for a reassembly:

Proctor	*reassemble*
Computer	*type course name//author number//typing option*
Proctor	(course name)*//axxxx//type* (if a print-out of the course is desired during reassembly)
Computer	(print-out of course, if requested, is done at this time)

While the computer is transferring the student records from the old disk pack to the new one, an abstract of each record is printed on the printer-keyboard. This is an example of an abstract:

FLAG	COURSE	STATEMENT	NUMBER	NAME
(Error indicator)	(Course name)	(Label-sequence number of current *qu* position)	(Student number)	(Student name)

The flag field has the following meanings:

Blank	No error.
l	The statement label has been deleted.
s	The statement sequence number no longer exists.
q	The statement is not an *rd* or *qu*.

If the statement field is blank for any record, that student has not yet begun to work on the course. If a flag appears for any record, that student is reset to the beginning of the new course.. The author, by instructing the student to use the *go to* control word, can reset the student properly.

At the end of a successful reassembly, the computer types: "reassembly successfully completed." The original course is now unavailable for use by the author or student. The availability of the reassembled course or any part of this course is contingent upon a successful reassembly. If a reassembly is unsuccessful, steps 1 and 2 above for a reassembly must be repeated.

Initial Program Loading

When the Initial Load Program deck is used to load the program into the system, an error halt could occur. Both the A- and B-address registers will show the number *111*. The proctor should press START on the reader to continue processing the deck.

If, however, the system will not restart, the problem is that the program cannot be read from disk storage. The proctor should check all switches to make sure they are in the positions outlined in this publication.

MESSAGE	REASON
drive number error	Drive number wrong. Drive not on line.
control word error	Invalid control word used. (See Proctor Control Word).
format error	Preceding requests for computer presented in wrong format.
pack full	Five courses already on pack or capacity of pack reached with lesser number of courses.
course name error	Invalid name specified, course not registered, disk pack with course not on line or lack of a second course record during reassembly.
student area full	Class capacity reached.
recording option error	See Recording Options.
pack in use	Drive requested for response recordings already in use.
author number error	Invalid author number typed or author not registered.
remove control word error	One of three types of remove command words not given. Should be remove author, remove student or remove recording.
student number error	Wrong student number used or student not registered.
remove recording error	Recording pack not on system.
date format error	Incorrect format for date routine.
request error	Invalid requests. Valid requests are poll, control, status and sign off line.
control rejected	Requests for line asked to be controlled could not be fulfilled.
number error	Invalid line number typed.
sign off line rejected	Activity on line prevents lines from being signed off.
insufficient course space	The new course record does not specify sufficient disk space for a reassembly.
insufficient student space	The new course record does not specify sufficient student record space for reassembly.
other assembly occurring	Only one reassembly is allowed at any one time.

Figure 10. Proctor Error Messages on Printer-Keyboard.

The utility programs used in the CAI programs are provided by IBM to the user. The utility deck contains three programs: *Load Functions, List Course and Student Records*, and *Extract and Print Student Response Records.*

The control cards, which are punched by the proctor according to the format outlined here, should be placed behind the utility program deck. The proctor should then:

1. Place the course pack on the disk drive he designates in his control card.
2. Set the write-disk switch, the check-stop switch, and switch A on.
3. Set all other switches off.
4. Press CHECK RESET, START RESET, 1448 CHECK RESET, and 1448 START RESET.
5. Place the utility deck in the card reader.
6. Load the utility deck by pressing START on the card reader and PROGRAM LOAD on the console.
7. When the system attempts to read the last card, press START on the card reader and the last card will be read.

This procedure for readying the computer should be followed each time one of the utility programs is to be used.

Load Functions

Once the functions have been stored on disk, special control cards can be used to make changes or additions. They include:

- Add additional functions.
- Equate new functions with another already in storage.
- Delete an entry from the functions table.
- Delete a function from storage.

An end-functions control card also is used to tell the computer the job of making changes to the functions has been completed. Five types of function changes may be made. Each requires a control card. All control cards must be placed behind the Load Function Program deck that is used to load them. The *add-function* control card must precede the function that is being inserted.

Add Function

This control card is required whenever a new function is to be added in the function area. The name of the function is automatically placed in the function table. The format of the add-function control card is:

Columns	*Contents*
1-3	Add
4	Blank
5-12	Function
13-20	Blank
21-30	Name of function to be added
31-80	Blank

Equate Function

This function is required when a new name is given to a function or a part of that function. If the new name is equated to the whole function, the relative address is 000, which must be entered in columns 41-43 of the following control card. If the new name is equated only to a part of the function, the relative address is the beginning of that part.

The format for the equate-function control card is:

Columns	*Contents*
1-6	Equate
7-20	Blank
21-30	Name of the new function
31-40	Name of function already in the system
41-43	Relative address of function in the table to be equated with new function
44-80	Blank

Delete Table

Whenever a function entry is to be deleted from the function table, a control card designating the entry to be eliminated is inserted behind the functions load program. The format for the delete table control card is:

Columns	*Contents*
1-6	Delete
7	Blank
8-12	Table
13-20	Blank
21-30	Function entry to be deleted
31-80	Blank

Delete Function

This function is required whenever a function is to be deleted from the function area in the system. The function automatically is removed from the system and the function table. The delete function control card format is:

Columns	*Contents*
1-6	Delete
7	Blank
8-15	Function
16-20	Blank
21-30	Name of funtion to be deleted
31-80	Blank

End Functions

This control card indicates that the job of making changes to the function area and table is finished. The format for the end functions control card is:

Columns	*Contents*
1-3	End
4	Blank
5-13	Functions
14-80	Blank

Error Detection

Whenever the system detects an error in the control card and finds that a function designated by that control card cannot be executed, an error message prints on the printer. An error in the control card will halt the system.

The error messages are preceded by the contents of the control card containing the error. This is a list of the messages printed when an error is detected:

delete function entry not in function area.
delete table entry not in table.
function already in sector xxxxxx.
add table entry already in function table.
function table full.
equated function not in table.

The final message to be printed on the printer is "function load program finished."

When an error is detected in the control card, the proctor should follow these four steps to correct the mistake:

1. Press the non-process run-out key on the card reader to retrieve the error card.
2. Correct the error in the error card.
3. Replace the corrected card in its proper position with the rest of the cards in the reader.
4. Press START on the console to resume processing.

List Course and Student Records

This program permits the proctor to print all of a particular course, parts of that course, or all student records for the course. For each print-out, the proctor must prepare a control card that must be placed behind the utility deck in the card reader. The control card should be punched as follows:

Columns	*Contents*
1-8	Course name
9-10	Blank
11	"S" or "C" to denote whether the listing is to be Student records or a Course.
12	Disk drive number where the course or student records are located.
13-20	Blank
21-30	First label (where listing of a course is to start).
31-33	First sequence number
34-40	Blank
41-50	Second label (where listing of course is to end).
51-53	Second sequence number
54-80	Blank

Assumptions if columns are left blank:

Columns	*Assumption*
1-8	Error
11	"C" – Course
12	Drive 0
21-30	Start of course
31-33	000
41-50	End of course
51-53	000

A course can be printed in whole or in part, depending on the information contained in the control card. If the whole course is to be printed, the proctor may punch only those columns from 1-12 as directed in the control card format. Otherwise, he must punch the entire card, as outlined, to receive a printed output that consist only of part of a course. The labels and sequence numbers designate the starting and stopping points for course print-outs.

Student records are printed in their entirety and cannot be selected individually. When only student records are wanted from disk storage, only columns 1-12 should be punched. The rest of the control card must be left blank.

Each time a listing is printed, it is preceded by a heading. There are two types of headings. One is for student records and looks like this:

course (name) *student records*

The second heading is for courses. It lists the course and the limits of the course. This heading looks like this:

course (name) *print* (label-seq. no.)//(label-seq. no.)

When requesting a listing of a course or student record, errors detected by the computer are printed on the printer (Figure 11).

Also printed is a message telling the proctor that the course or record print-out has been completed. After each error message is printed, the computer halts. Pressing START on the console will restart the computer for the reading of the next control card.

The proctor, however, may correct the error first by pressing the non-process run-out button on the card reader to reach the control card containing the error. The card can be corrected, replaced in the reader in the same position from which it was taken, and processing continues.

Extract and Print Recordings

Only the student responses designated by the recording option (1-7) are recorded. These recorded responses can be printed directly on the printer according to one of the designated selection options specified on a control card.

Responses also may be extracted (by selection option) and moved first to a "scratch" disk pack on another disk drive. This is an intermediate step in obtaining a specific set of responses, excluding all others.

Consider this example: Suppose all responses for many students are recorded and we now want to print only the responses to *ca's* (correct answers) from one of the students. It will be necessary to make two passes with this utility program. The first extracts all responses from the selected student and places them on a "scratch" pack. Let us use disk drive 2.

The second pass prints only the student's *ca* responses from the scratch pack. The control cards for these two passes should be punched like this:

MESSAGE ON 1443 PRINTER	REASON
pack not registered	Disk pack on drive is not registered.
course name error	Course name in control card is not on disk pack you specified.
end of course printout	Requests in control card completed.
sequence number error	Numbers in columns 31-33 or 51-53 are incorrect.
label error	Label specified in columns 21-30 or 41-50 is incorrect.
student record print finished	Job specified in control card has been completed.

Figure 11. Messages for List Course and Student Record.

Control Card 1

Columns	*Entry*
1	*S*
2	*E*
4	(drive number of recording pack)
11-15	(student number)

Control Card 2

Columns	*Entry*
1	*O* (letter O, not zero)
3	*P*
4	2
11-12	ca

It is permissible to extract and print responses in the same pass. The intermediate step used only the extract option in the above example to avoid printing the *ca* responses from the other students.

The general format of the control card is:

Columns	*Contents*
1	Selection option: *C* if by Course name, S if by Student number, *O* if by Operation code, *L* if by *qu* identification, *R* if by Response identification.
2	*E* if the material is to be Extracted.
3	*P* if the material is to be Printed.
4	Drive number where material is located. (Drive O is assumed if this column is left blank.)
5	Alternate drive of disk pack to be used for extracted material. (Drive 2 is assumed if this column is left blank.)
6-10	Blank
11-23	Punch course name in columns 11-23, or student number in columns 11-15, or operation code in columns 11-12. For L and R codes, punch label in columns 11-20 and sequence number in columns 21-23.
24-80	Blank

See the IBM Systems Reference Library publication *IBM 1401, 1440, or 1460 Operating System, Computer Assisted Instruction*, Form C24-3253, for a detailed explanation of the selection options.

Figure 12 contains the *Extract and Print Recording* error messages that are printed on the printer before the computer halts.

Extract and Print Headings

During the extract and print routine, one of several different types of headings is printed out on the printer, depending on the control card entry for the current job.

The responses may be extracted, printed, or extracted and printed. The way the material is extracted and printed is defined in the control card. For example, suppose the author wants all responses for a course extracted from disk storage and printed. The heading would look like this:

extract and print *course* (name of course)

If only extracting is done, only the word *extract* and the course designation is printed to tell the proctor what type of work is being performed. If the responses are being printed directly from storage, the word *print* and the type of responses to be retrieved from the disk file are printed followed by a print-out of the material.

MESSAGE	REASON
error in column 2 or 3. must be an E or P	E is for extract and P is for print. This column defines whether extract or printing or both jobs are to be performed.
column 1 invalid, must be C, S, O, L or R	See table on control card information for extract and print routine.
course name error	Course name starting in column 11 of the control card is wrong.
disk pack not registered for recordings	Wrong disk pack on line.
start, end or current disk address error	Pack record is in error.

Figure 12. *Extract and Print Recording* Error Messages.

General Keyboard Description

The printer-keyboard is an input/output unit (Figure 13). The paper remains stationary during the printing of each line. A single printing element, shaped like a ball, contains the entire set of characters that the printer-keybroad is capable of printing.

Keyboard Standard Features

Key Arrangement

Figure 14 shows the basic arrangement of the four-bank keyboard. The keys on the keyboard include *character* and *function* keys. The shift keys and the shift lock generate the up-shift code when pressed. When the shift keys are released, the down-shift code is generated.

Keyboard Function Keys

The keyboard function keys available are:

- Space
- Backspace
- Line Feed
- Tab
- Alternate coding
- Return (carrier return and line feed)
- Shift (and shift lock)

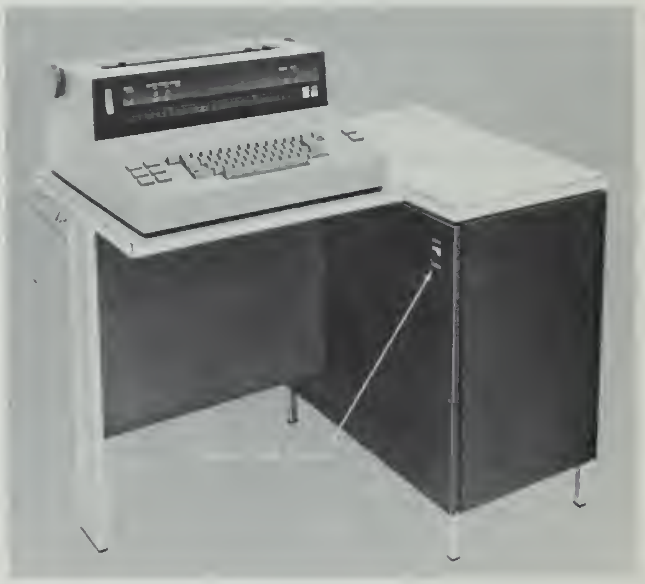

Figure 13. IBM 1052 Printer-Keyboard.

The alternate-coding key (ALTN CODING) allows dual keying from the numeric row of keys. ALTN CODING does not generate a code character. Instead, pressing and holding ALTN CODING while pressing one of the dual-coded numeric keys in the top row generates the output code for the control function noted above the numeric key selected.

For example, if ALTN CODING and the 5-key are pressed at the same time, the operator generates an end-of-block (EOB) code. If ALTN CODING and the zero key are pressed, the operator generates a cancel code. These are the only two codes the operator using

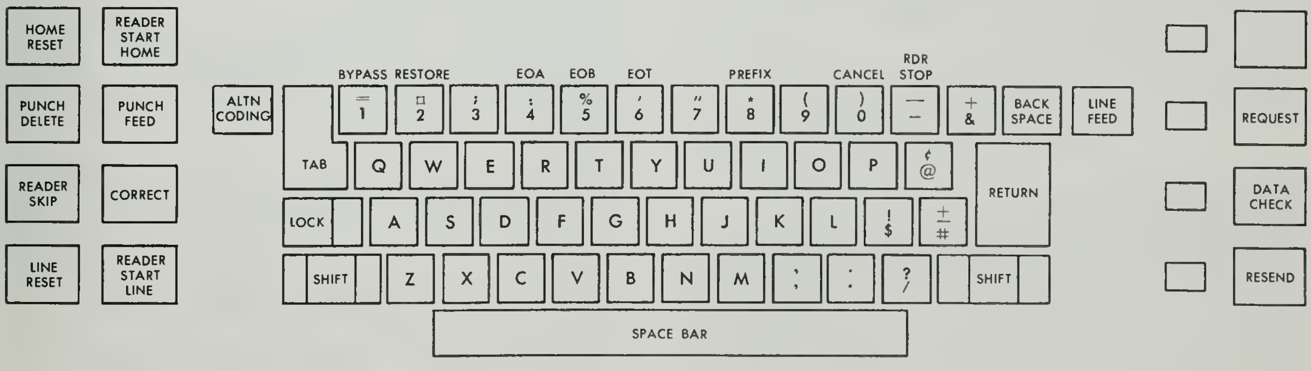
HOME RESET
READER START HOME
PUNCH DELETE
PUNCH FEED
READER SKIP
CORRECT
LINE RESET
READER START LINE
ALTN CODING
BYPASS
RESTORE
EOA
EOB
EOT
PREFIX
CANCEL
RDR STOP
= 1
□ 2
; 3
: 4
% 5
' 6
" 7
* 8
(9
) 0
— –
+ &
BACK SPACE
LINE FEED
TAB
Q W E R T Y U I O P
¢ @
RETURN
LOCK
A S D F G H J K L
! $
± #
SHIFT
Z X C V B N M
; ,
: .
? /
SHIFT
SPACE BAR
REQUEST
DATA CHECK
RESEND

Figure 14. IBM 1052 Keyboard.

the printer-keyboard for the CAI program needs. Although other control functions are available, they are not necessary.

Note: To avoid errors while using the alternate-coding key, the operator should press and hold ALTN CODING before one of the dual-coded numeric keys is pressed. If one of the numeric keys is pressed first, that number, instead of the desired code, will be entered into the computer.

Other numeric keys may be pressed accidentally with ALTN CODING while the operator is attempting to key an EOB. Pressing the 6-key with ALTN CODING, for example, signals an end-of-transmission (EOT), causing the keyboard to lock up and taking control of the printer-keyboard away from the operator.

Control, however, is returned shortly. The operator receives the green light to proceed when this happens. He should immediately press ALTN CODING and the zero key to cancel the message containing the EOT, and then key the EOB. The material should be retyped with the proper EOB code.

If any of the numeric keys interlocked with ALTN CODING is pressed accidentally, the operator should immediately key a cancel code followed by an EOB. He does not lose control of the printer-keyboard with any of the other keys.

Character Cautions

Some of the keys on the keyboard, like those on the typewriter, are similar when typed. Two of the outstanding examples are the letter "O" and the numeral "zero", and the lower-case letter "l" and the numeral "one."

Because they look alike, the operator should be careful when typing these characters to avoid using one for the other. When the wrong character is typed, even though they look alike on the paper in the printer-keyboard, it is considered a wrong answer by the computer. The computer recognizes these characters for what they are.

Unseen Characters

Some of the keys on the printer-keyboard do not leave any mark on your paper when they are pressed. However, they do send characters to the computer that are counted in the 150-character limit per block of print.

The six keys that do not leave any marks on your paper are: SPACE, LINE FEED, BACKSPACE, TAB, RETURN, and SHIFT. If you are counting characters, then each of these keys should be counted as a character.

Let us take for example the name *George Washington.* As the name is written, it contains sixteen characters. Let us type it on the printer-keyboard:

↓G↑eorgeb↓ W↑ashington

↓ = downshift (press shift key)
↑ = upshift (release shift key)
b = blank (or space)

When the name *George Washington* is transmitted to the computer, 21 characters are involved because of the downshift, upshift, and space functions that were used.

If the name *George Washington* were entered into the computer and two spaces were inserted between the first and last name, and the typist backspaced to eliminate the extra space, two extra characters were transmitted.

The name would be correctly printed on your paper with only one space between *George* and *Washington.* But, the name would look like this when sent to the computer:

↓G↑eorgebb←↓W↑ashington

← = backspace

The actual transmission to the computer would total 23 characters. If *George Washington* were an author or a student, his name would exceed the maximum number of 22 characters allowed for his name.

Note: If the allowable 22 characters are exceeded, CAI accepts only the last 22 characters keyed on the printer-keyboard.

Input to the Computer

Every input to the computer must end with an end-of-block (EOB) signal. The EOB, in effect, tells the computer that the entry is complete and can now be processed.

To enter an EOB, hold down the alternate coding key (ALTN CODING) first and then strike the 5-key. (This is similar to holding down the shift key while typing a capital letter.) When properly done, the EOB signal is sent to the computer, and nothing is printed.

The EOB is the last character sent to the computer from the printer-keyboard for a block of input. This means that if a line contains an error, that error cannot be cancelled by using the cancel code after an EOB has been keyed.

Error Cancellation

If the operator makes an error in typing, the mistake can be discarded immediately after it occurs by generating a cancel code. The cancel code tells the computer not to process this line of type.

This must be done before an EOB is keyed. Once an EOB is keyed for a line of type, it cannot be cancelled.

The cancel code is generated by holding down ALTN CODING first and then striking the zero key. The operator should then key an EOB. The computer will then ask the operator to "please repeat" his entry. The correct line should then be retyped.

Key Interlock

All keys except the following are mechanically interlocked to prevent pressing of more than one key at a time:

- ALTN CODING.
- *Return* and *line-feed* keys, with each other only.
- Shift keys are locked together.

Shift Keys

Pressing either shift key generates the upper-case code. This key, when released, generates the lower-case code.

For example, pressing the shift and "G" keys gives the operator a capital "G." Pressing the "G" key alone gives the operator a lower-case "g." Pressing the shift and "8" keys produces an asterisk (*). Pressing the "8" key alone gives the numeral "8."

Pressing the lock key causes the same effect as the shift key except that the shift keys remain locked. Pressing either shift key unlocks the shift keys and generates the lower-case code.

Operation of Printer-Keyboard

Before the operator begins to use the printer-keyboard, he should be sure the main-line power switch on the side of his unit is turned on (see Figure 13). The next step is to check all switches on the front panel to determine if they are in their proper positions.

Figure 15 contains a list of all possible switches. Those followed by an asterisk are the most common minimal set. There may be fewer switches on your set, depending upon the model and features attached to your system. It is important that the switches be positioned according to this list.

Note: All switches should be set by the proctor or author. The switch settings should not be touched while the printer-keyboard is in use. An error in transmission could result or the student at the unit could be *signed off* the system.

Margin Setting

The left and right margin set levers are inside the printer-keyboard. They provide for positioning the left and right margin stops. These stops can be changed by:

1. Turn the main-line switch on (see Figure 13).
2. Move the print-element carrier to the center of the line by pressing either the spacebar or the tab key.
3. Turn the main-line switch off.
4. Lift the top cover and tilt the hinged switch panel toward the front of the printer-keyboard.
5. Press the blue margin indicator toward the rear of the printer-keyboard, and slide it to the new location.

The exact position of the margins is always shown at the front of the unit by the two blue indicators on the visible margin guide (see Figure 16). The white indicator shows the position of the print-element carrier.

Tab Setting

Tabs, if required for a particular course segment, may be set with the CLR/SET lever located to the left of the margin guide. Tabs may be set by:

1. Positioning the white print-element carrier indicator on the margin guide at the point the tab is to be set.
2. Pressing the CLR/SET lever downward and then releasing it.
3. Repeating steps 1 and 2 for other tabs that may have to be set.

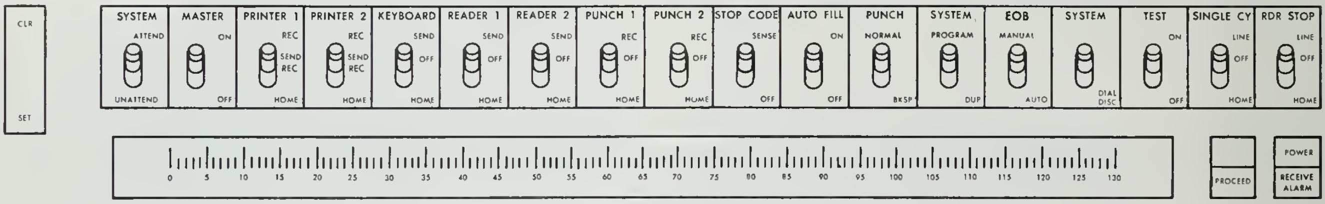
CLR
SET
SYSTEM
ATTEND
UNATTEND
MASTER
ON
OFF
PRINTER 1
REC
SEND REC
HOME
PRINTER 2
REC
SEND REC
HOME
KEYBOARD
SEND
OFF
HOME
READER 1
SEND
OFF
HOME
READER 2
SEND
OFF
HOME
PUNCH 1
REC
OFF
HOME
PUNCH 2
REC
OFF
HOME
STOP CODE
SENSE
OFF
AUTO FILL
ON
OFF
PUNCH
NORMAL
BKSP
SYSTEM
PROGRAM
DUP
EOB
MANUAL
AUTO
SYSTEM
DIAL DISC
TEST
ON
OFF
SINGLE CY
LINE
OFF
HOME
RDR STOP
LINE
OFF
HOME
0
5
10
15
20
25
30
35
40
45
50
55
60
65
70
75
80
85
90
95
100
105
110
115
120
125
130
PROCEED
POWER
RECEIVE ALARM

FRONT PANEL SWITCHES

SWITCH NAME	POSITION
System*	ATTEND (up)
Moster	OFF (down)
Printer 1*	SEND/REC (middle)
Printer 2	HOME (down)
Keyboord*	SEND (up)
Reoder 1	OFF
Reoder 2	OFF
Punch 1	OFF
Punch 2	OFF
Stop Code	OFF
Auto Fill	OFF
Punch	NORMAL
System	PROGRAM
EOB	MANUAL (up)
System*	(up)
Test*	OFF (down)
Single Cy	OFF
RDR Stop	OFF

* The minimol set of switches required for CAI.

Figure 15. Front Panel Switches on the 1052 Printer-Keyboard.

Clearing Tabs

The procedure for clearing tabs is similar to the method for setting theim. Tabs may be cleared by:

1. Positioning the white print-element carrier indicator on the margin guide at the location of the tab.
2. Pressing the CLR/SET lever upward and then releasing it.
3. Repeating steps 1 and 2 for other tabs that may have to be cleared from the printer-keyboard.

Operating Cautions

The operator at the printer-keyboard is notified by the computer whenever an error occurs. Corrective action for these errors is described in the following paragraphs. (See Figure 14 for locations.)

Proceed Light

Typing on the printer-keyboard can be done only when the green proceed light is on at the unit. If the light is off, wait until it comes on again before continuing. Some systems may have the Text Time-Out Suppression optional feature to permit continuous operation.

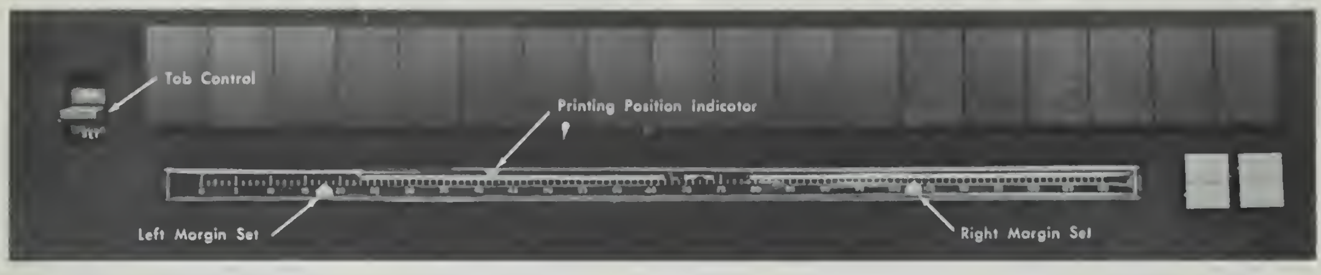

Figure 16. Margin Guide and Tab Lever.

If, while the operator is typing, the green proceed light goes out because of too long a pause between characters, the operator should wait until the light comes on again, key a cancel code followed by an EOB, and then retype the line of text.

Receive Alarm

If the receive-alarm light (next to the proceed light) blinks, the unit probably is out of paper or the paper is not holding down the white roller, which closes the paper control contact. This condition can be corrected by the proctor.

Data Check and Resend Lights

If the data check light or the resend light comes on and remains on, press the associated key next to it.

Transmission Error

If the printer-keyboard types a dash and the resend light comes on after a line of data has been typed, this means the message was not received correctly by the program. It must be retyped. Press the resend button before retyping the line.

System Error Messages

These error messages print on the printer-keyboard. Figure 17 lists the systems error messages and the reasons for them.

MESSAGES ON PRINTER-KEYBOARD	REASON
please repeat	Cancel key depressed.
message too long	Statement limit of 150 characters exceeded.
1311 error	Error in 1311. Recheck all switches.
type sign on	Error in sign on procedure.
function error	Error in course or systems pack, depending on what you are doing at time message is printed.

Figure 17. System Error Messages.

Glossary

Alternate Coding Key: The key used with one of the numeric keys on the top row of the printer-keyboard to generate a special code such as the end-of-block (EOB) or cancel codes.

Author: One who writes a course for Computer-Assisted Instruction and has complete control over the course content.

Block of Print: The material keyed on the printer-keyboard, starting with the operation code, up to and including the end-of-block code.

Cancel Code: The code or signal generated to cancel input on the printer-keyboard before an end-of-block code is keyed.

Card Reader: An input unit that senses and translates the holes in punched cards.

Character: A code sent to the computer when a key on the printer-keyboard is pressed. *Only* the alternate coding key when pressed alone does not send a character to the computer.

Computer Assisted Instruction (CAI): A method of allowing an author to use an IBM computer system as a means of writing and presenting instructional material to a number of students individually.

Console: A panel that contains lights, keys, switches, and related circuits for a computer system.

Control Card: A card containing information for the CAI utility programs.

Control Words: Used by the author, proctor, and student to alert the computer to specific actions they wish to perform.

Counters: A three-position storage location used in conjunction with the *br* and *ad* operation codes.

Course Material: The actual contents of a course prepared by the author and presented to the student. Course material also may be called text, arguments, or statements.

Course Pack: The disk pack reserved for course material.

Coursewriter: The language used by an author to write caurse material for the CAI operating system.

Coursewriter Instruction Sheet: The coding sheet on which an instructor writes his course material with the corresponding labels and operation codes before typing the material on the printer-keyboard.

Disk Sector: A section of a disk pack containing 100 characters. One disk pack contains 20,000 sectors.

End-of-Block (EOB): A signal to the computer that, in effect, tells it a block of print is complete and can now be processed.

Label: Used to identify course statements. It is used as an entry point into a course or a segment of a course.

Line Constants: Items of internal information used by the program to identify the current line activity.

Label Sequence Number: A label and its associated sequence number. They are separated by a dash.

Operation Code: Defines the action to be taken for each course statement. Operation codes consist of two characters. CAI has 12 operation codes.

Patch Card: Used to adapt the CAI program to a computer system.

Printing on the Fly: Printing that occurs while the printer-keyboard carrier is returning from the right to the left margin.

Proctor: One who operates the computer system for CAI.

Printer: An output unit used for printing material associated with the utility programs.

Printer-Keyboard: An input/output unit used by the author, proctor, and students to communicate with the computer.

Recording Pack: The pack reserved for storing designated student responses.

Recording Option: An option designated by a number and used to tell the CAI program what student responses are to be saved and stored on disk for future reference.

Systems Pack: The disk pack on which the CAI program is stored.

Sequence Number: The number that identifies a block of print between labels.

Sign On and Sign Off: The words keyed on the printer-keyboard by the author, proctor, and student to tell the computer they wish to begin or end work with the CAI program.

Statement: See *Course Material.*

Text Time-Out Special Feature: An optional feature that permits continuous operation of the printer-keyboard.

Text: See *Course Material.*

Index

Abstract of Records 19
Add Function 21
Alternate Coding Key 11, 25
Author as Student 11
Author Registration 16
Author Removal 18
Author's Control Words 7, 10
Author's Error Messages 7
Author's Information 7
Author's Name 12
Author's Number 12
Author's Sign Off 11
Author's Sign On 7

Block of Print 10, 11
Branch Instruction 10
Building the Systems Pack 14

Cancel Code 27
Carrier Return Printing 11
Character Cautions 26
Clear Disk Utility Program 13
Clearing the Disk Packs 13
Clearing Tabs 28
Computer Assisted Instruction 5, 12
Computer Assisted Instruction Functions Deck 12
Control 17
Control Cards 12
Course Execution Sequence 8
Course Input Format 7
Course Material 7
Course Name 12
Course Registration 16
Course Removal 18
Course Statement 10, 12
Coursewriter 5
Coursewriter Instruction Sheet 7

Daily Initialization 15
Data Check and Resend Lights 29
Date Student Responses 17
Delete Function 22
Delete Table 21
Disk Utility Program 12

End Functions 22
End-of-Block Code (EOB) 7, 10, 11, 25, 26
End-of-Transmission (EOT) 25
Equate Function 21
Error Cancellation 27
Error Detection 22
Extract and Print Headings 23
Extract and Print Recordings 23
Extract and Print Student Response Records 21

Fixed Time-Out Feature 11
Function Error Messages 22

General Keyboard Description 25
Glossary 30

Halt 18

Initial Generation 5, 12
Initial Load Program Deck 13, 15
Initial Program Loading 19
Input to the Computer 26

Key Arrangement 25
Key Interlock 27
Keyboard Function Keys 25
Keyboard Standard Features 25

Label 7, 10
Label Sequence Number 7, 10
Line 17
Line Requests 16
  Control 17
  Poll 17
  Sign Off Line 18
  Status 18
List Course and Student Records 22
List Course and Student Records Program 21
Load Function Deck 14
Load Function Error Messages 14
Load Functions 21
Load Functions Program 21
Loading the Functions 14

Machine Requirements 5
Major Operation Codes 8
Margin Alignment 10
Margin Setting 27
Minor Operation Codes 8

Name Length 16

Operation Cautions 28
Operation Code 5, 7
Operation Code Field 10
Operation of Printer-Keyboard 27

Patch Cards 13
Poll 17
Polling Line 1 15
Printer 5
Printer-Keyboard 5, 12, 15, 25
Printer-Keyboard Operation 27
Printing-on-the-Fly 11
Proceed Light 28
Proctor 12
Proctor Control Words 15
  Date 17
  Halt 18
  Line 17
  Reassemble 19
  Register Author 16
  Register Recording 16
  Register Student 16
  Remove Author 18
  Remove Recording 18
  Remove Student 18
  Sign Off 18
Proctor Error Messages 15
Proctor Information 12

Proctor Input Operation 15
Proctor Sign Off 18
Proctor Sign On 15

Reassemble 19
Receive Alarm 29
Recording Options 12, 16
Recording Pack Registration 16
Recording Removal 18
Resend and Data Check Lights 29

Setting Tabs 27
Shift Keys 27
Sign Off Line 17, 18
Status 17, 18
Status Information 18
Student Names 12
Student Numbers 12
Student Registration 16
Student Removal 18
Student Responses 16, 23
System Error Messages 29
Systems Deck 12
Systems Pack 12, 15

Tab Clearing 28
Tab Setting 27
Text 7
Text Time-Out Suppression 17
Textual Material 10
Transmission Error 29

Unseen Characters 26
Update Disk Addresses 18
Utility Decks 13
Utility Programs 21

IBM 1440-1448 Printed in U.S.A. C24-3384-0

IBM
International Business Machines Corporation
Data Processing Division
112 East Post Road, White Plains, N. Y. 10601

READER'S SURVEY FORM

IBM 1440-1448 Operating System, Computer Assisted Instruction
Author and Proctor Manual (C24-3384-0)

- Is the material:

	Yes	*No*
Easy to read?	☐	☐
Well organized?	☐	☐
Fully covered?	☐	☐
Clearly explained?	☐	☐
Well illustrated?	☐	☐

- How did you use this publication?

  As an introduction to the subject ☐
  For additional knowledge of the subject ☐
  Studying machine operation ☐
  During an actual service call ☐

- Which of the following terms best describes your job?

Customer Personnel

Manager ☐
Systems Analyst ☐
Operator ☐
Programmer ☐
Trainee ☐
Other ______________

IBM Personnel

Customer Engineer ☐
Instructor ☐
Sales Representative ☐
Systems Engineer ☐
Trainee ☐

Field Stock Personnel ☐
Manufacturing Engineering ☐
Manufacturing ☐
Development Engineering ☐
Other ______________

- How often do you use this publication?

  Often ☐ Occasionally ☐ Seldom ☐

- Comments:

Your comments help us produce better publications. Please include specific page references if appropriate. You may include your name and address if you wish.

Space is available on the other side of this page for additional comments.
Thank you for your cooperation.

Staple

Fold Fold

FIRST CLASS
PERMIT NO 170
ENDICOTT, N. Y

BUSINESS REPLY MAIL
NO POSTAGE NECESSARY IF MAILED IN THE UNITED STATES

POSTAGE WILL BE PAID BY . . .

IBM Corporation
P. O. Box 6
Endicott, N. Y. 13764

Attention: Product Publications, Dept. 171

Fold Fold

Cut Along Line

IBM
International Business Machines Corporation
Data Processing Division
112 East Post Road, White Plains, N. Y. 10601

Additional Comments:

thesB142
Development of a computer assisted instr
3 2768 001 91180 3
DUDLEY KNOX LIBRARY